Bestelgaragedeur.nl

Handleiding

Classic 45 met torsieveren
voor

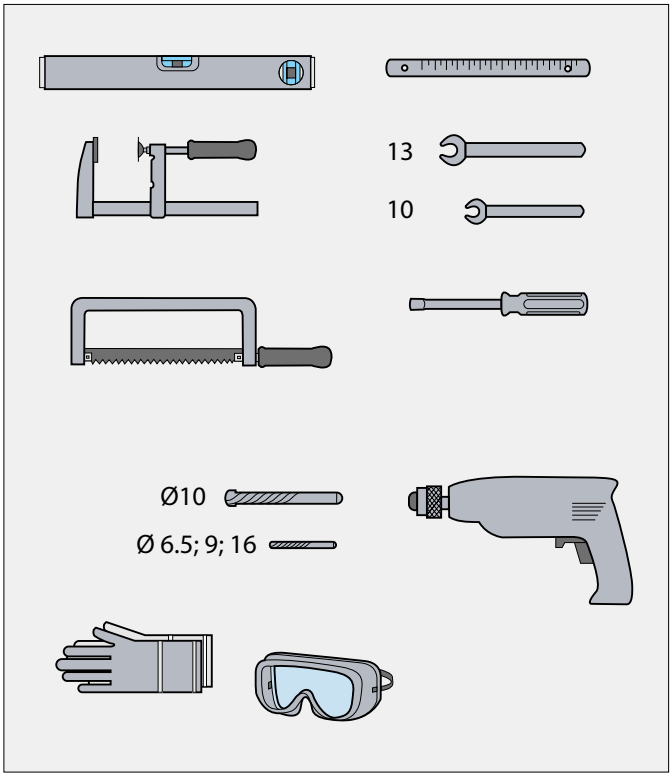
13
10
Ø10
Ø 6.5; 9; 16

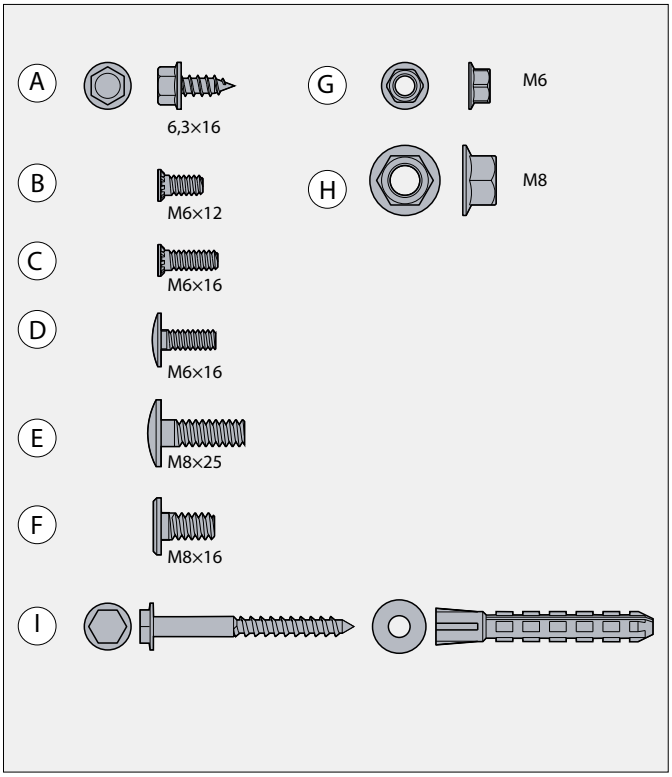
A
6,3×16
B
M6×12
C
M6×16
D
M6×16
E
M8×25
F
M8×16
I
G
M6
H
M8

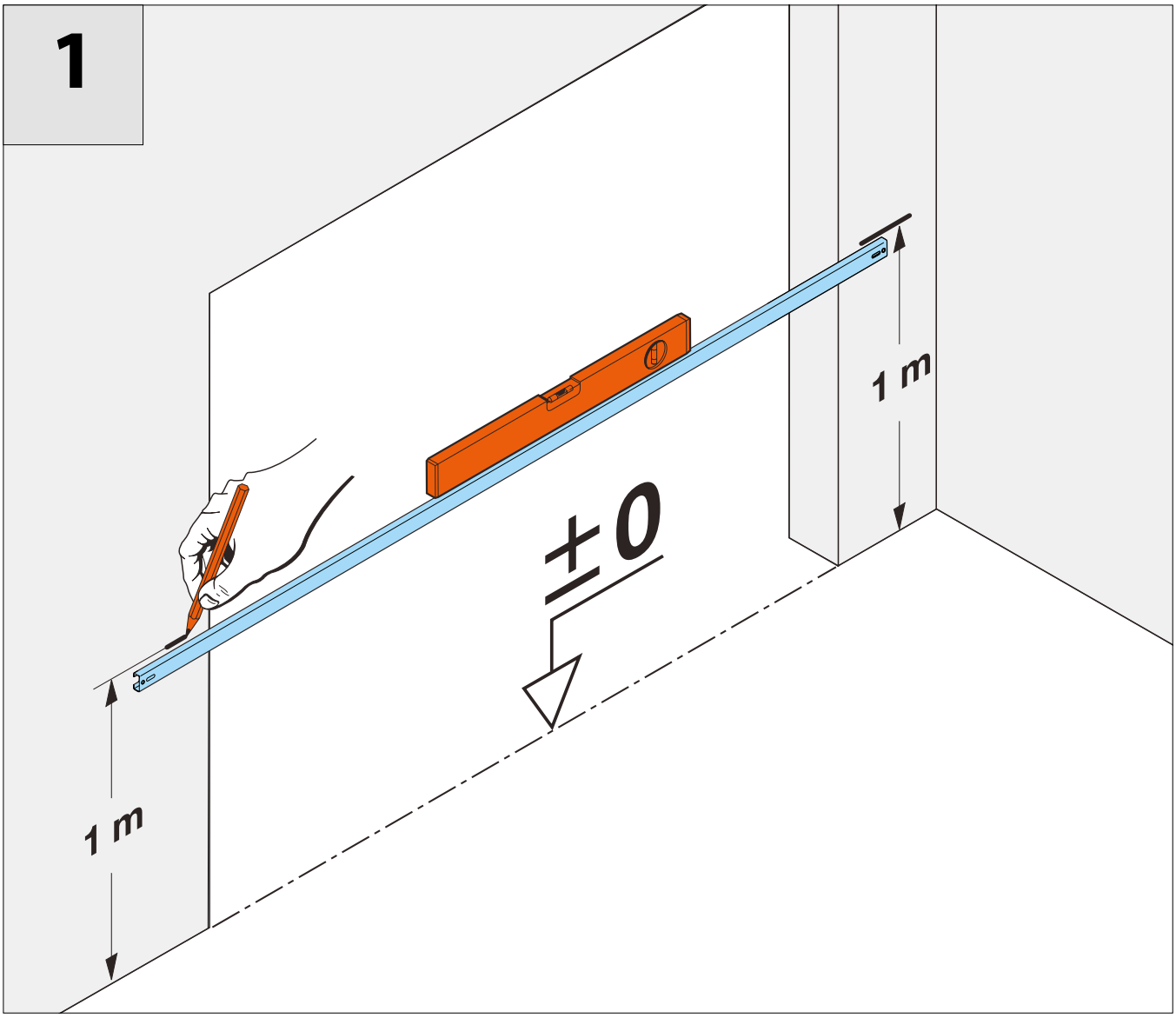
1
1 m
±0
1 m

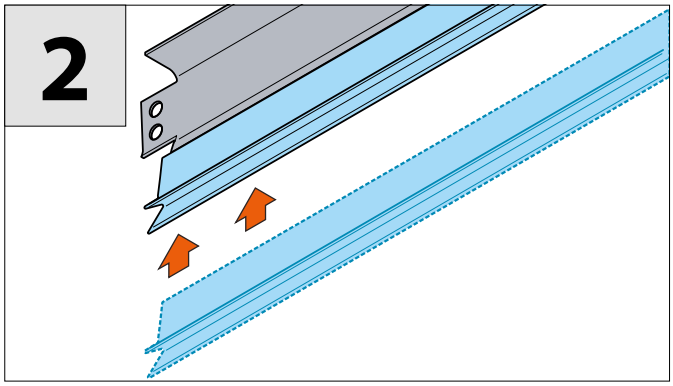
2

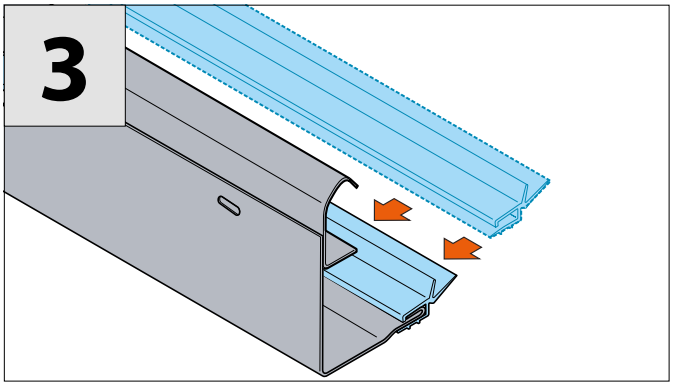
3

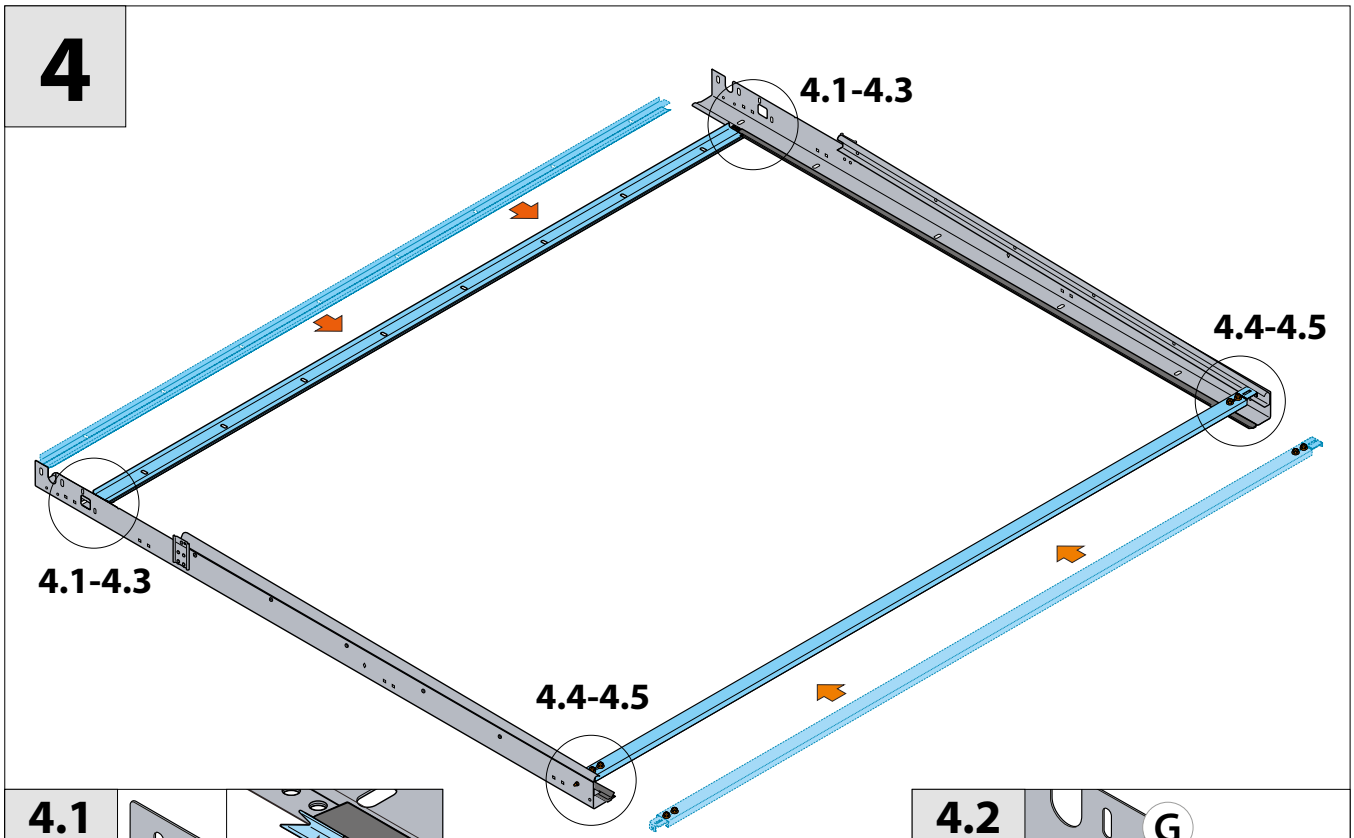
4
4.1-4.3
4.4-4.5
4.1-4.3
4.4-4.5

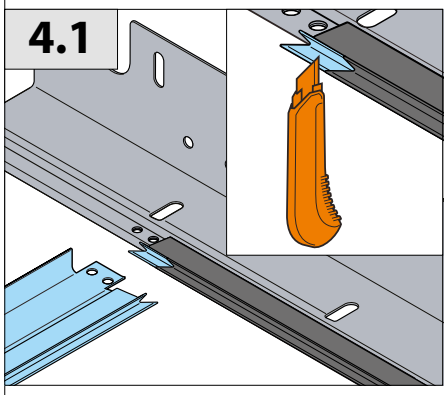
4.1

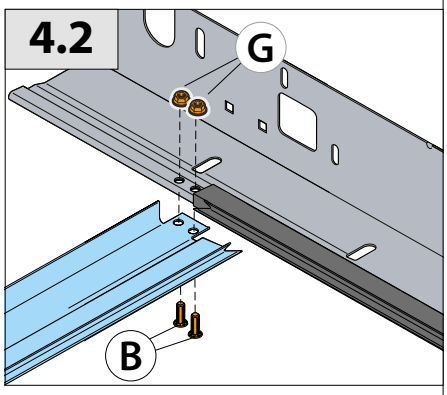
4.2
G
B

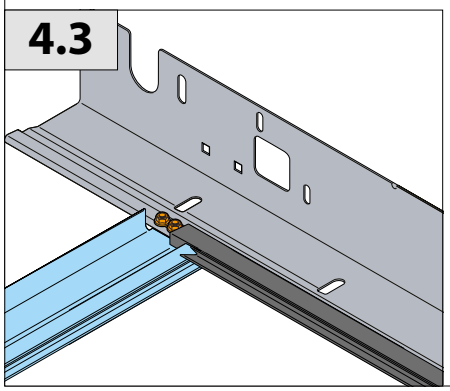
4.3

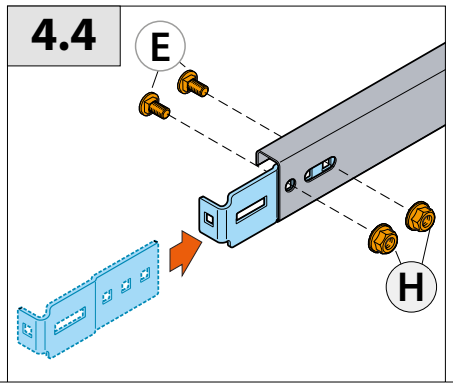
4.4
E
H

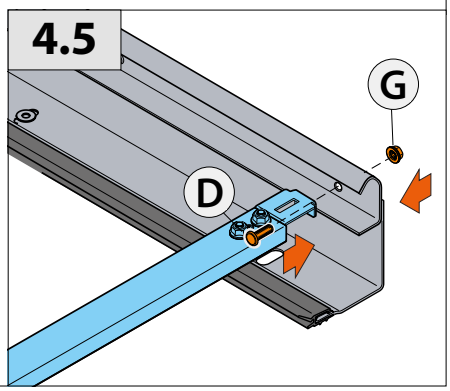
4.5
G
D

5

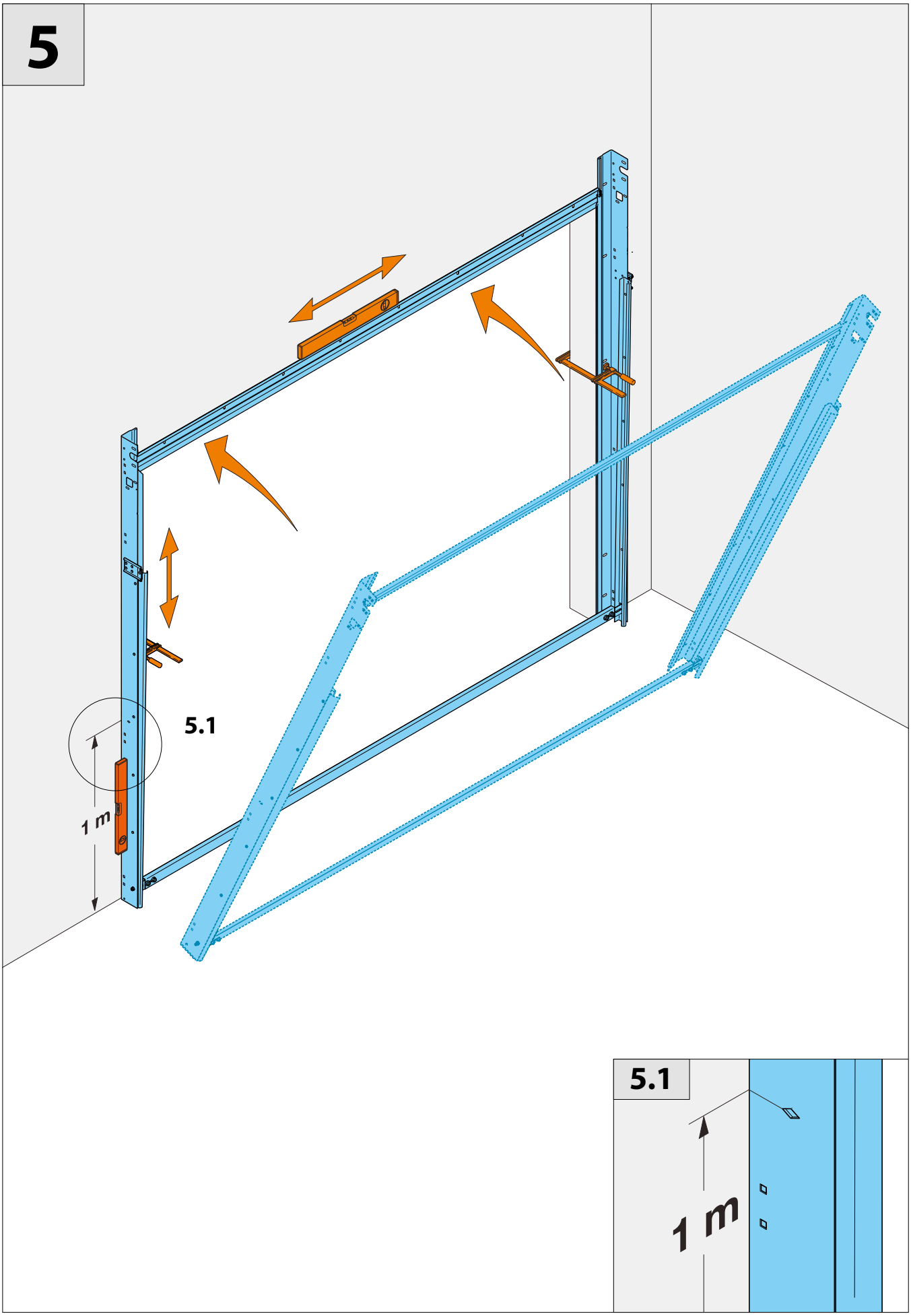

6a

Bevestigings-
bouten worden
niet meegeleverd.

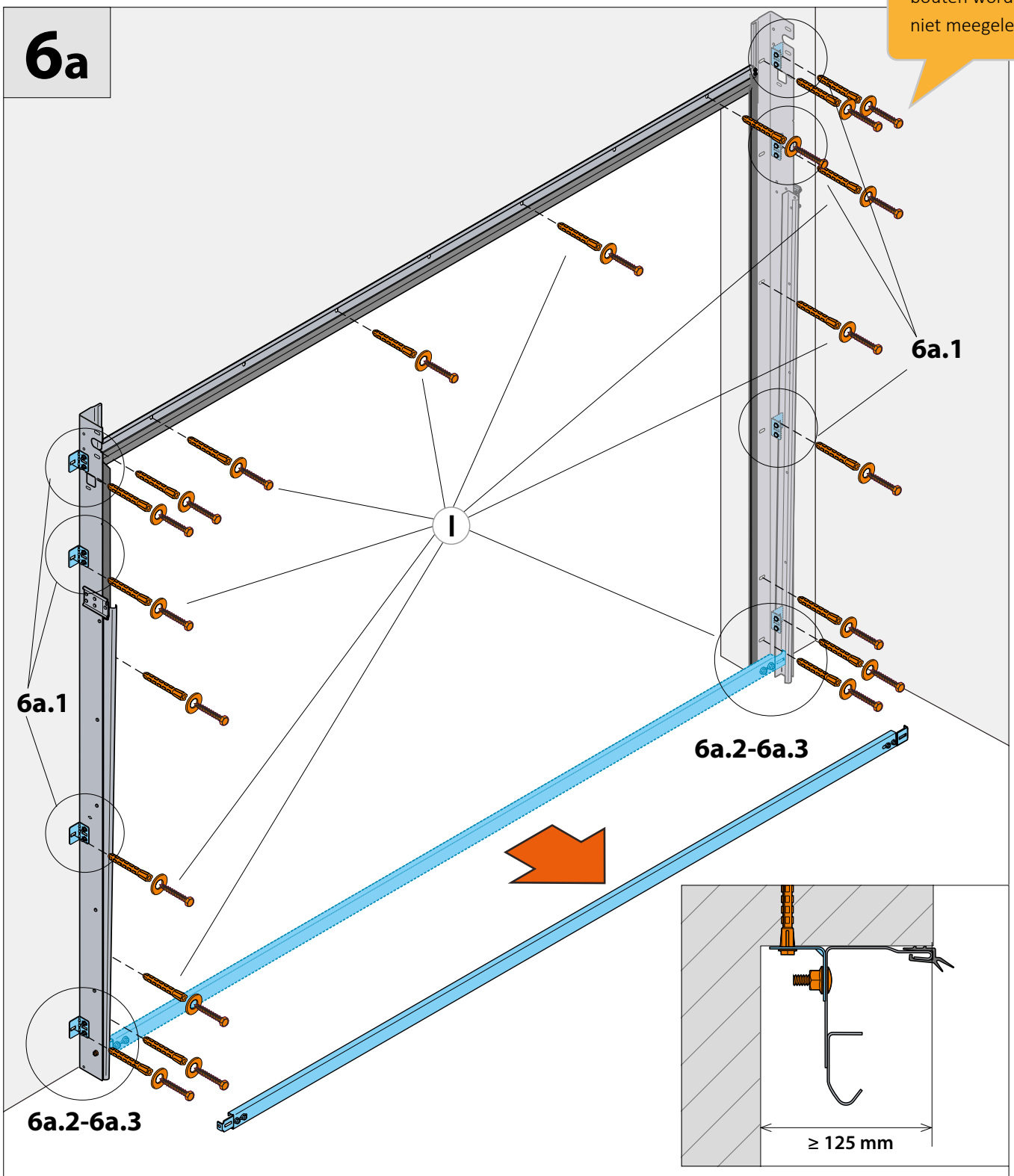

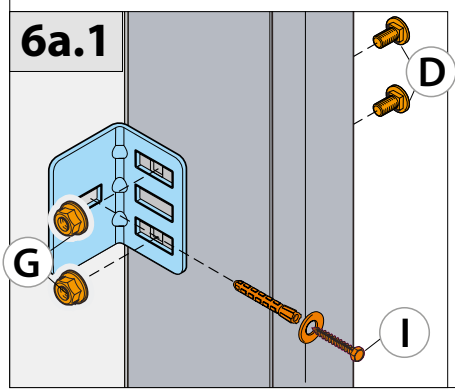

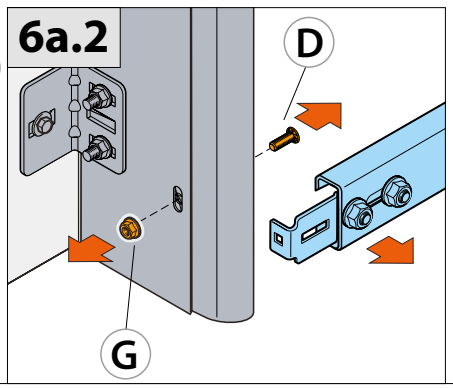

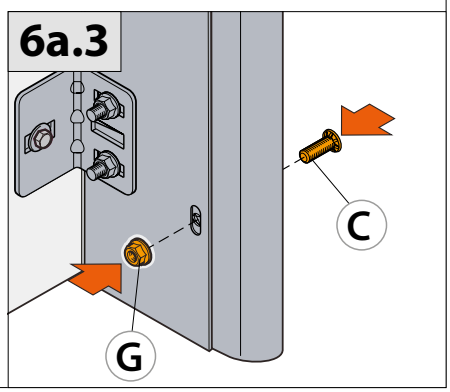

6b

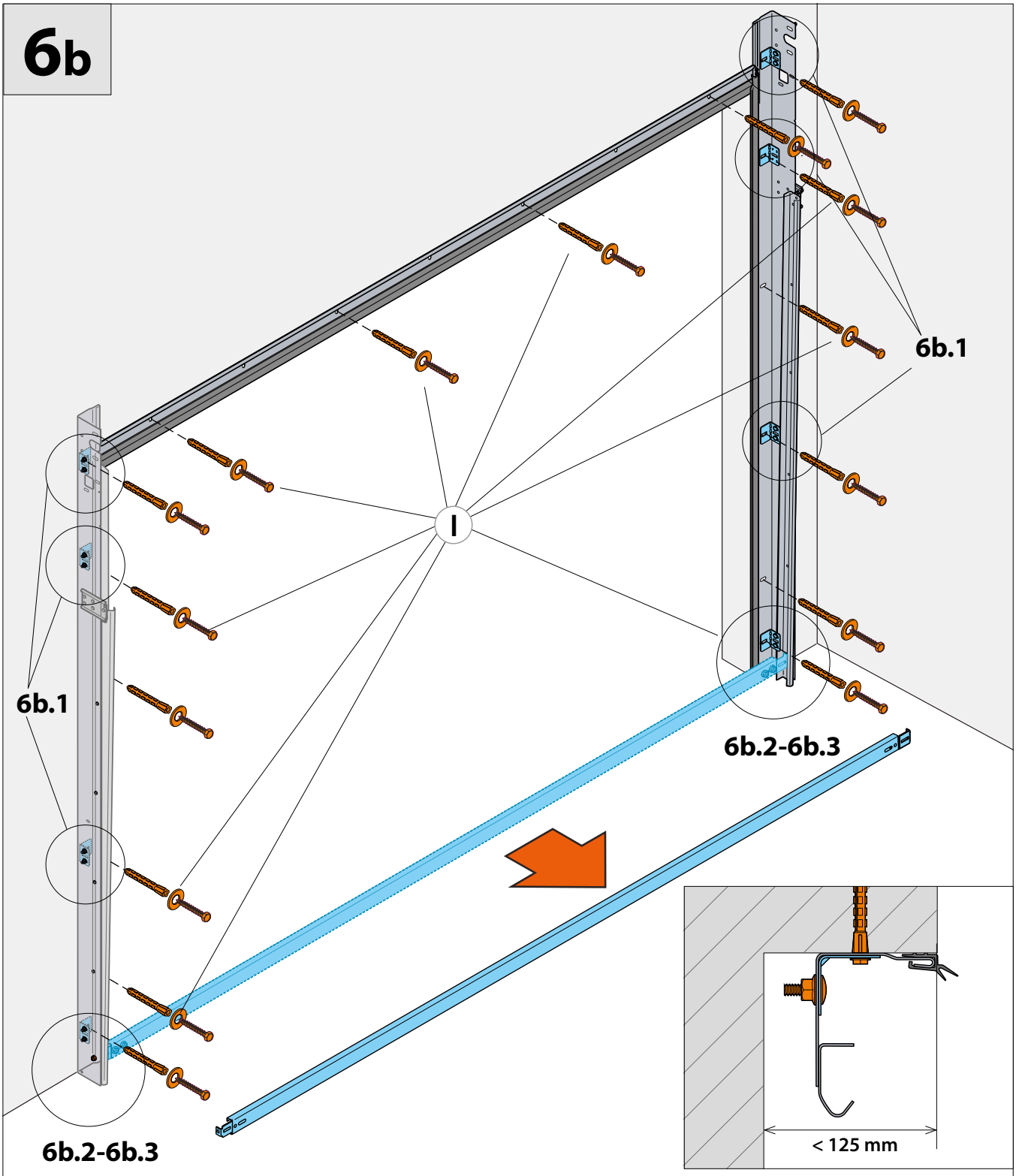

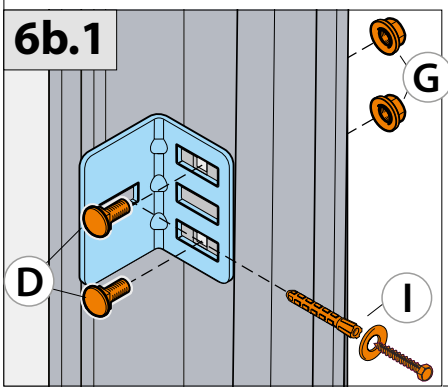

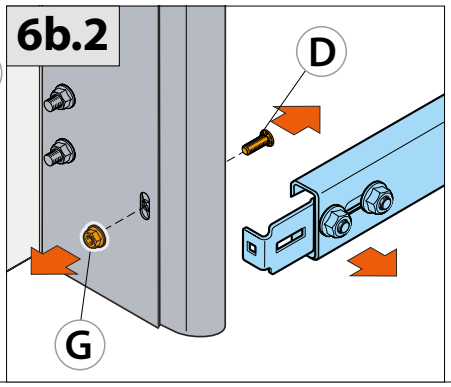

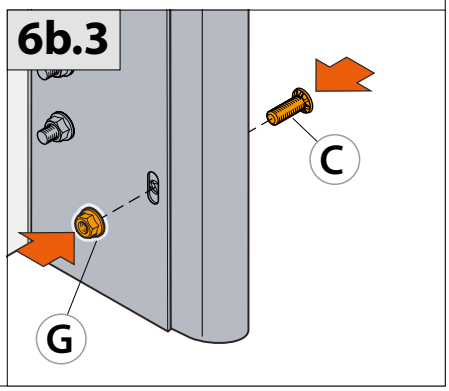

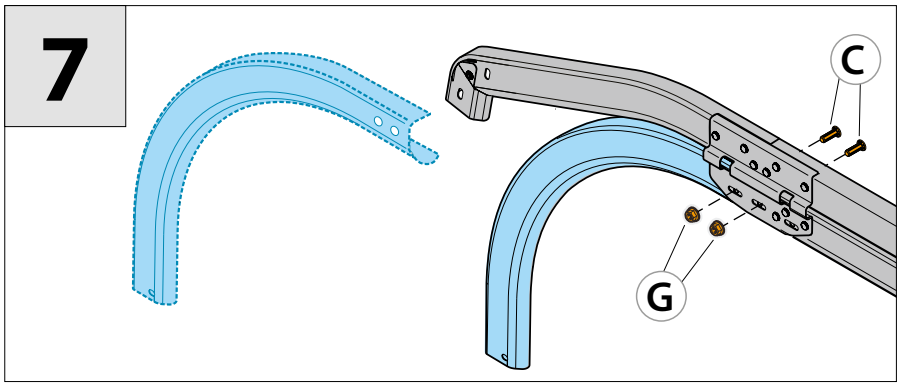
7
C
G

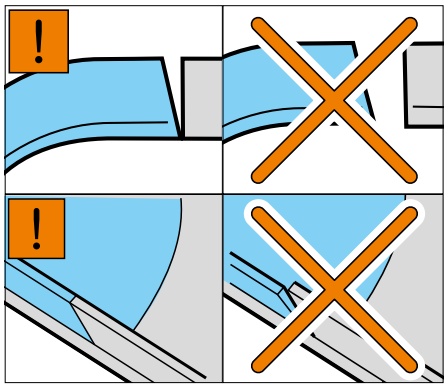
!
!

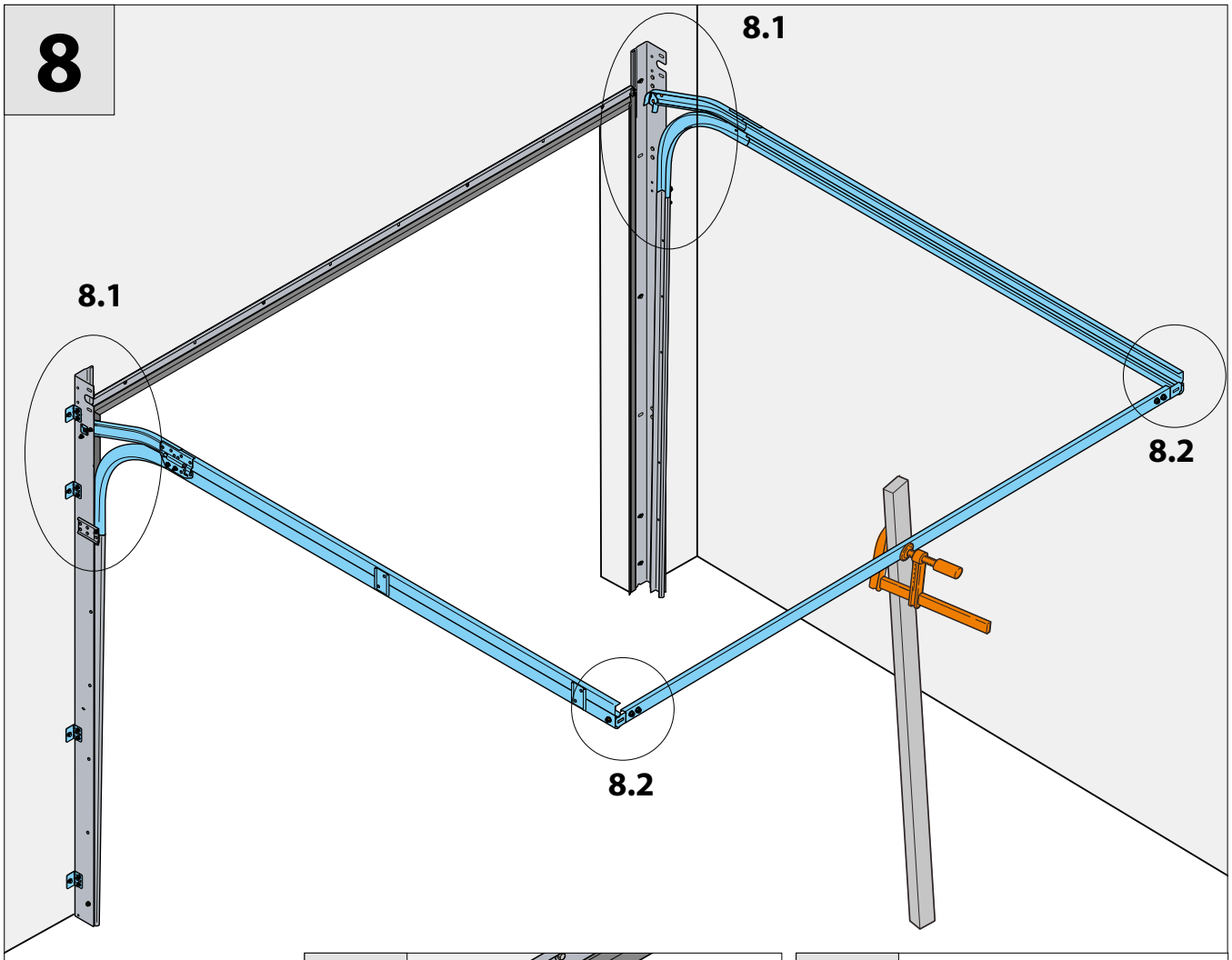
8
8.1
8.1
8.2
8.2

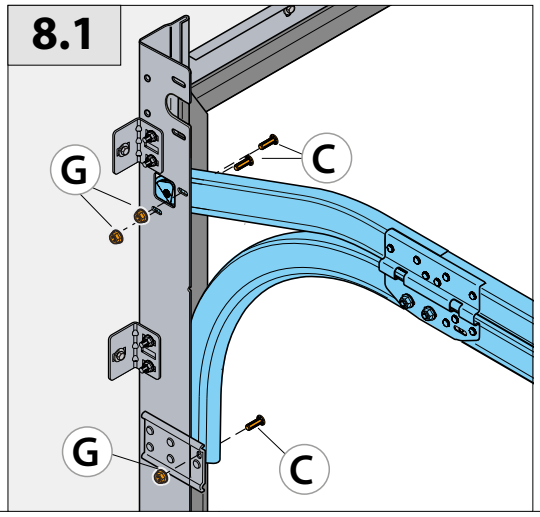
8.1
G
C
G
C

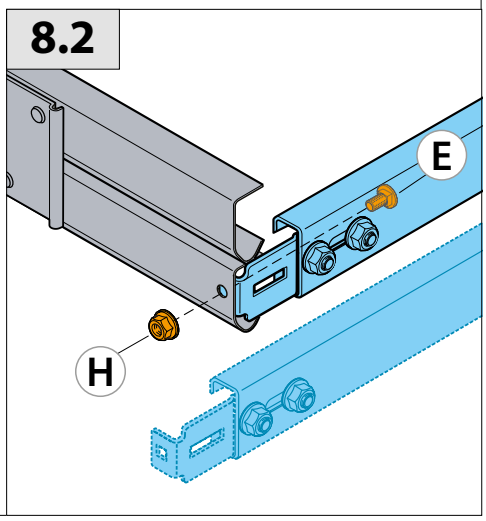
8.2
E
H

9

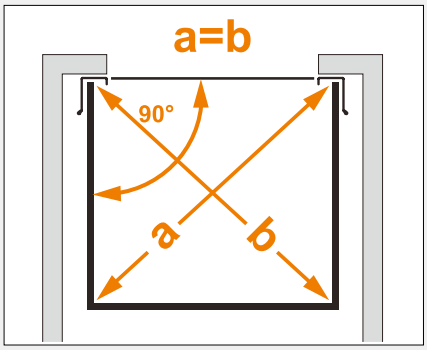

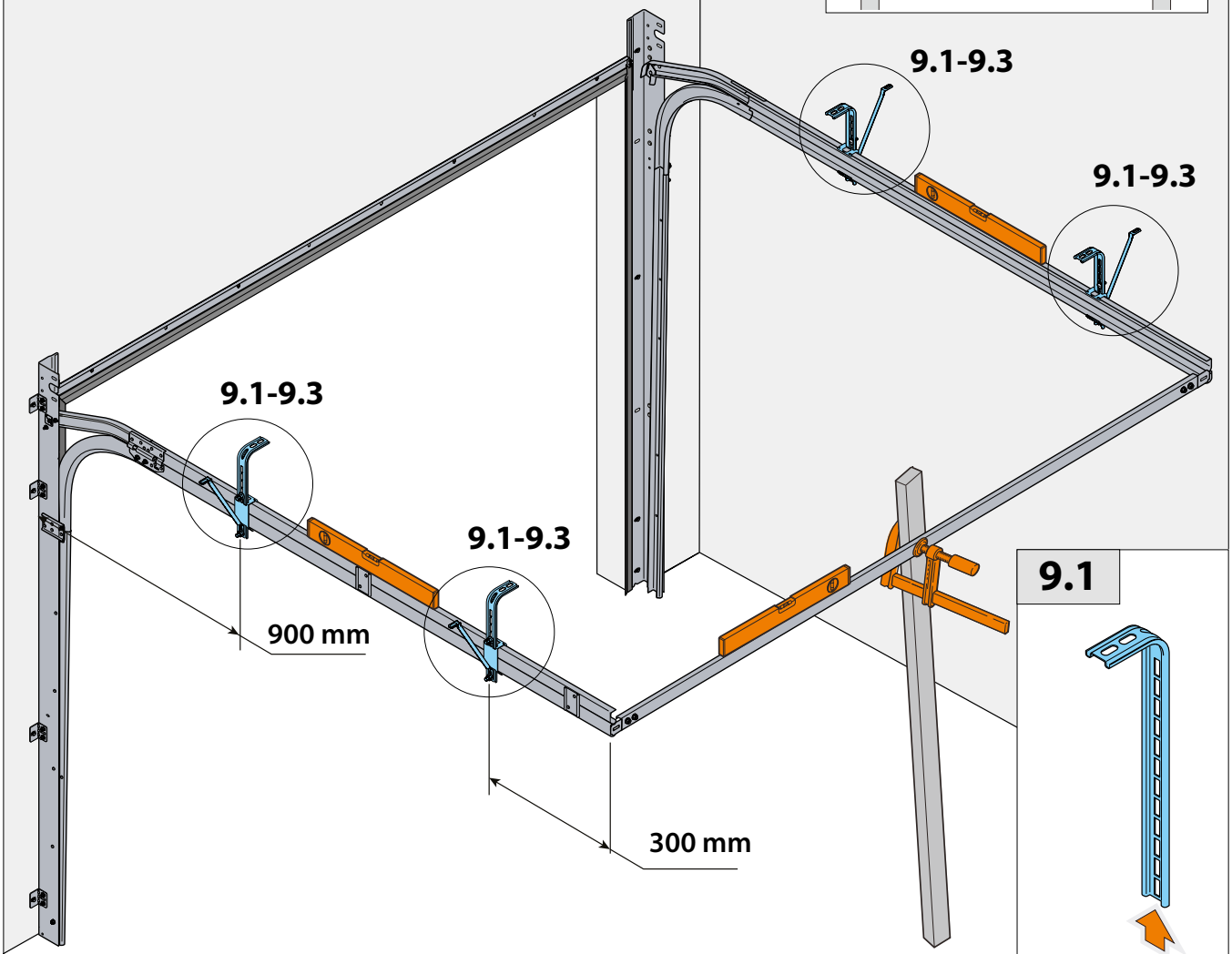

9.1

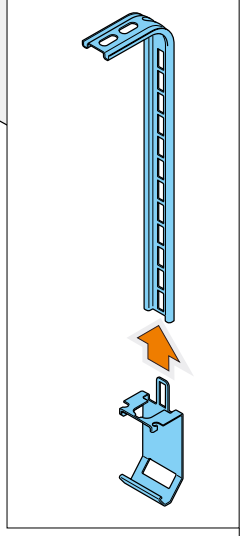

9.2

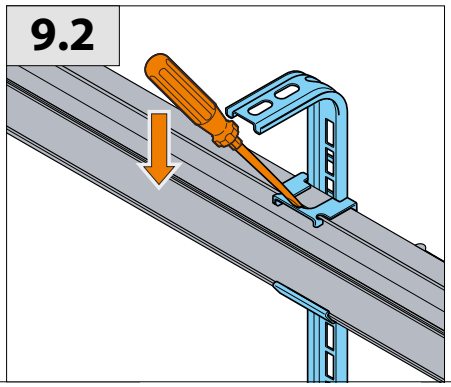

9.3

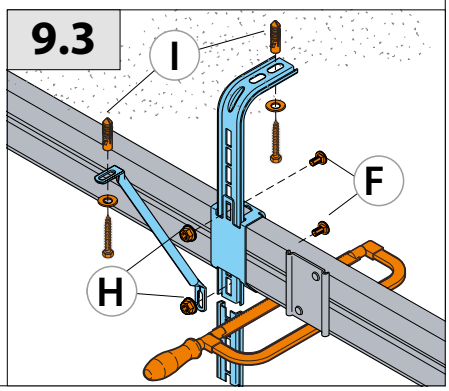

10

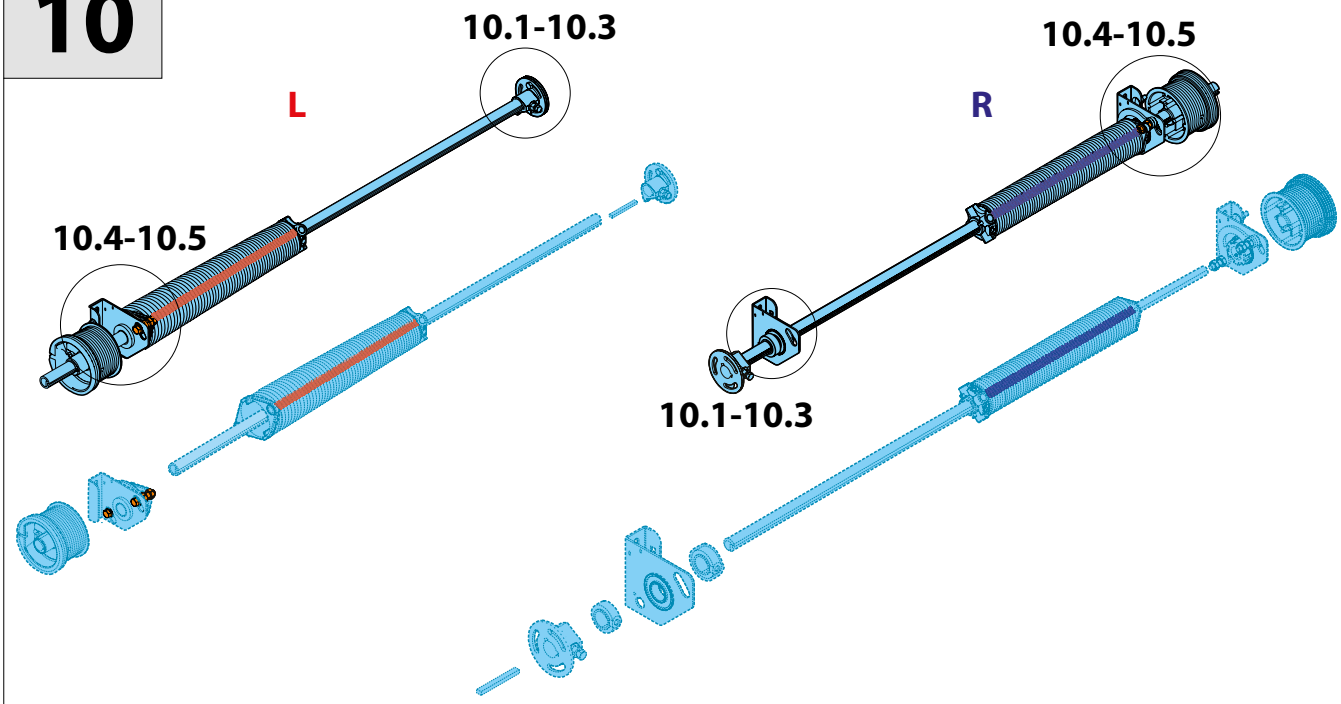

10.1

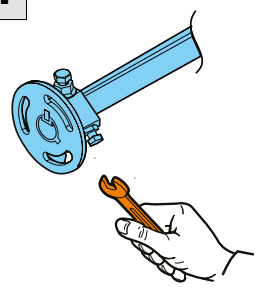

10.2

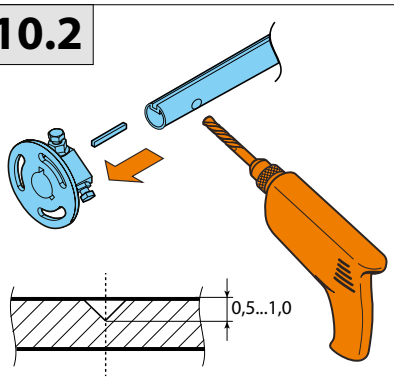

10.3

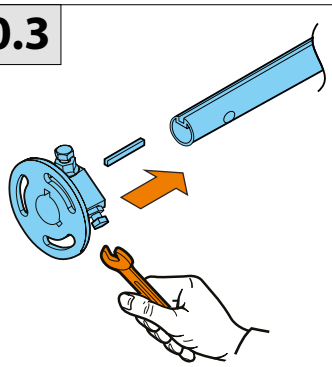

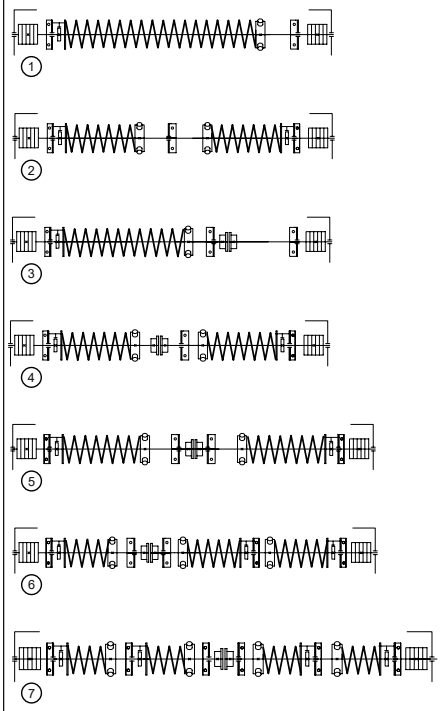

10.4

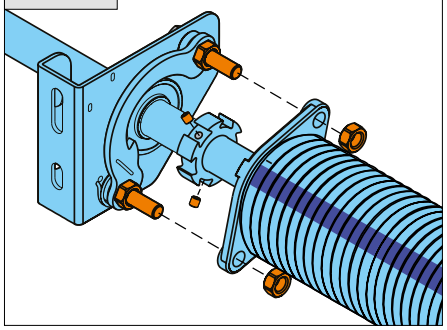

10.5

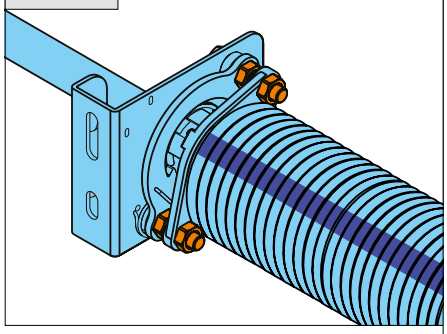

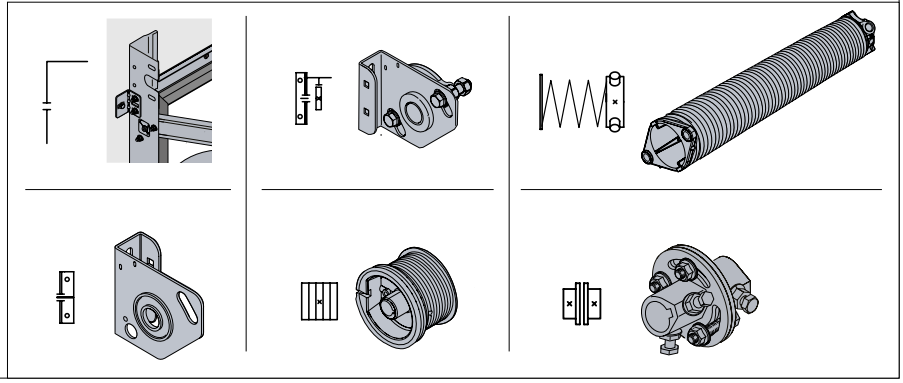

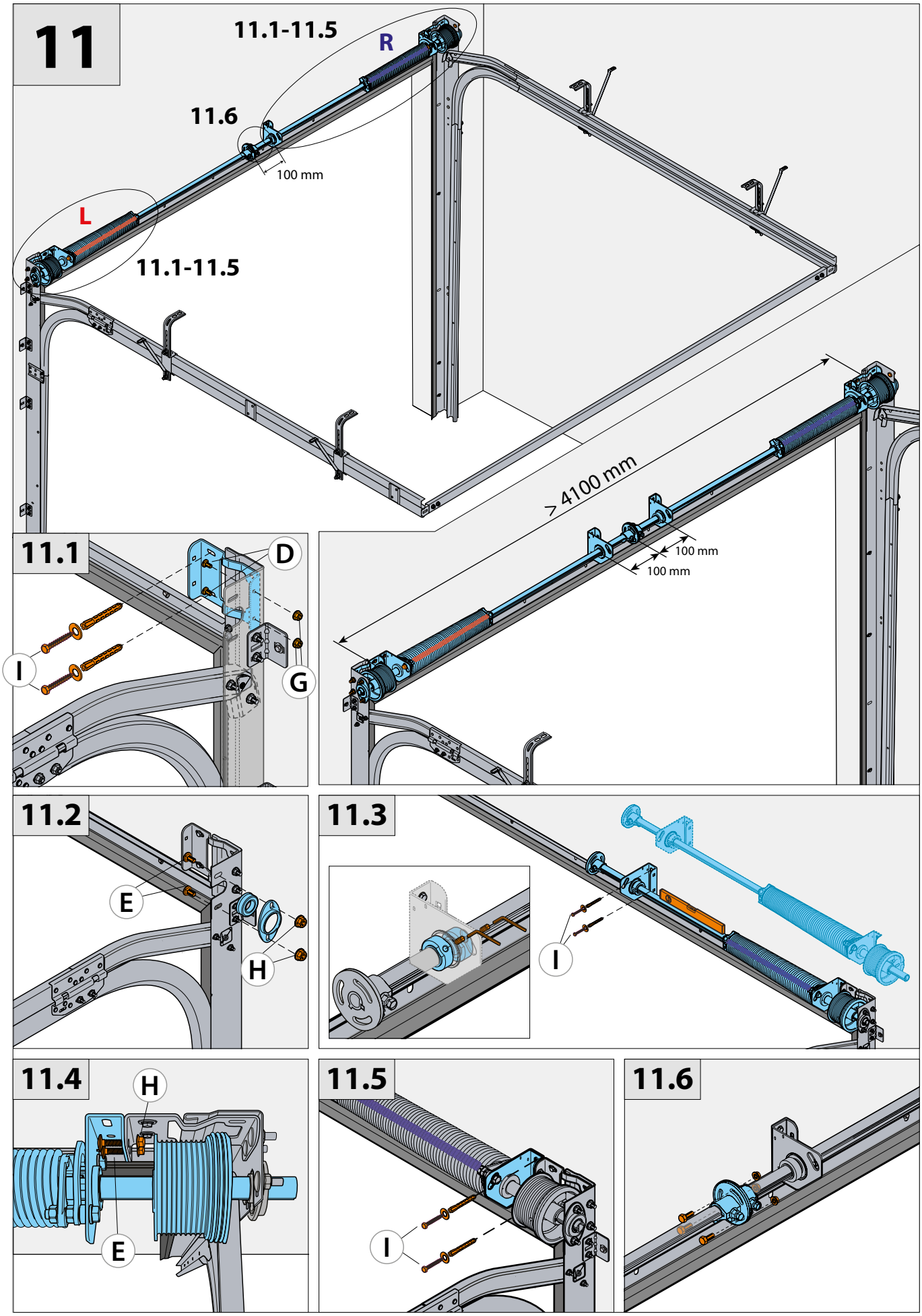
11
11.1-11.5
R
11.6
100 mm
L
11.1-11.5
> 4100 mm
100 mm
100 mm
11.1
D
I
G
11.2
E
H
11.3
I
11.4
H
E
11.5
I
11.6

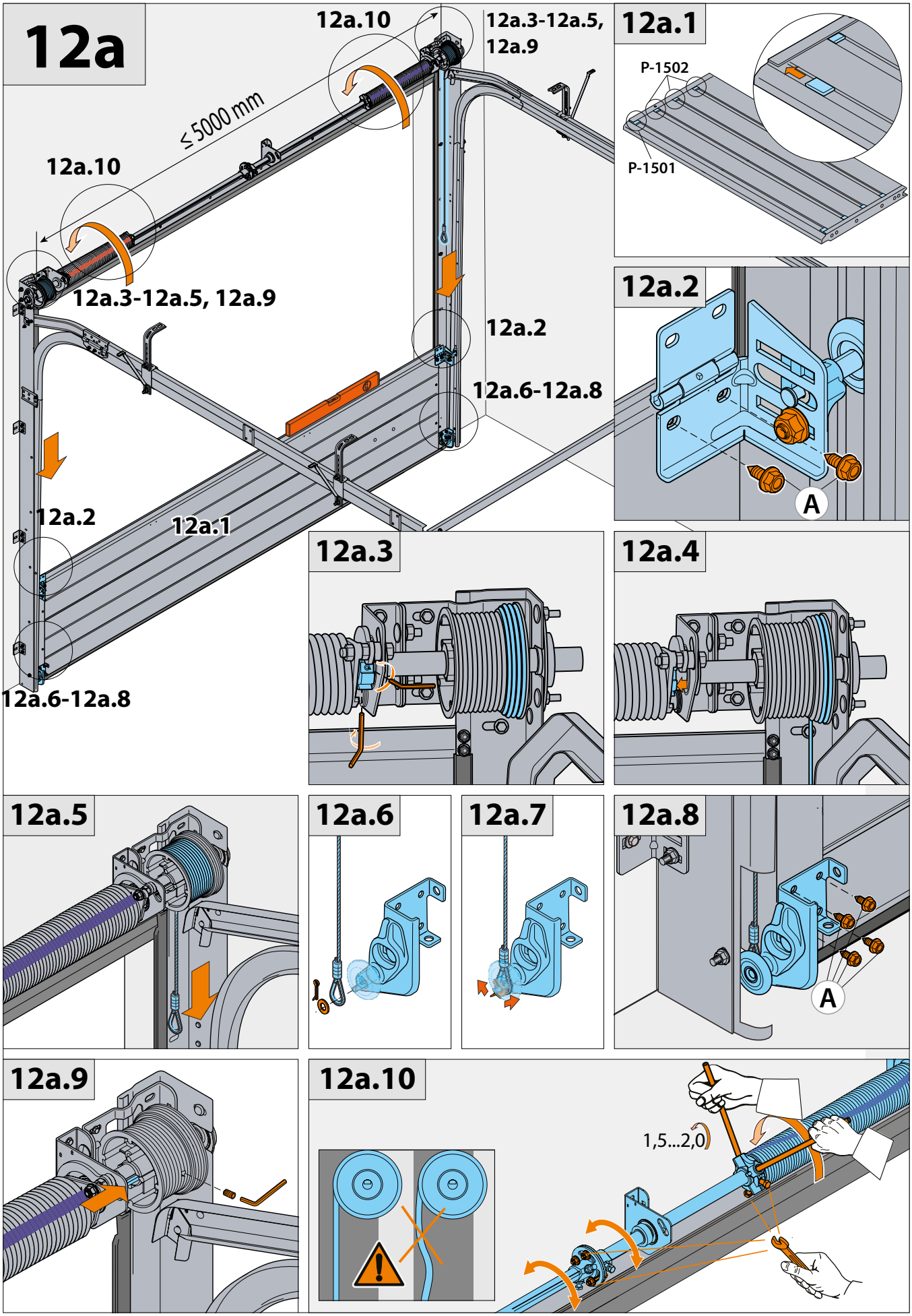
12a
12a.10
12a.3-12a.5,
12a.9
≤5000 mm
12a.10
12a.3-12a.5, 12a.9
12a.2
12a.6-12a.8
12a.2
12a.1
12a.6-12a.8
12a.1
P-1502
P-1501
12a.2
A
12a.3
12a.4
12a.5
12a.6
12a.7
12a.8
A
12a.9
12a.10
1,5...2,0

12b

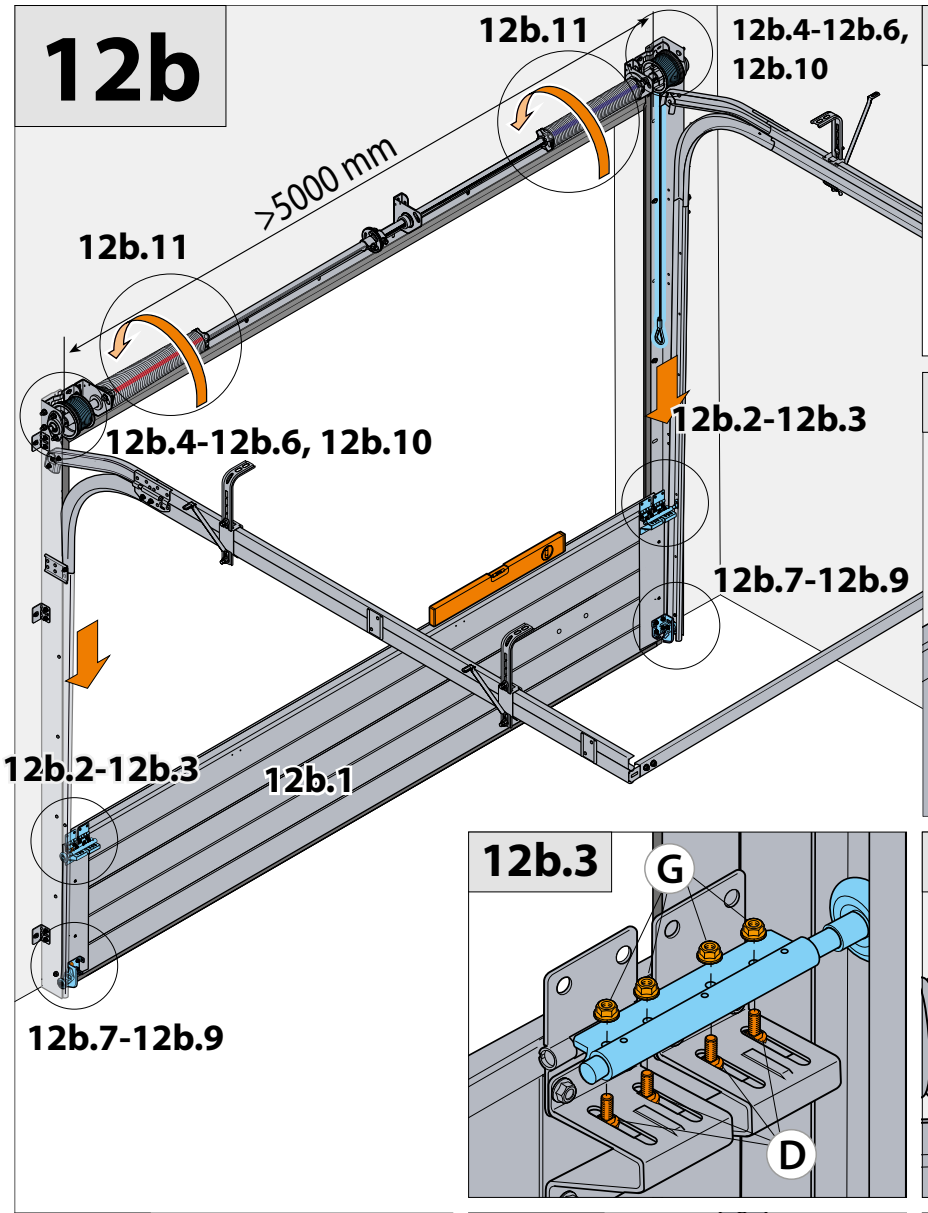

12b.1

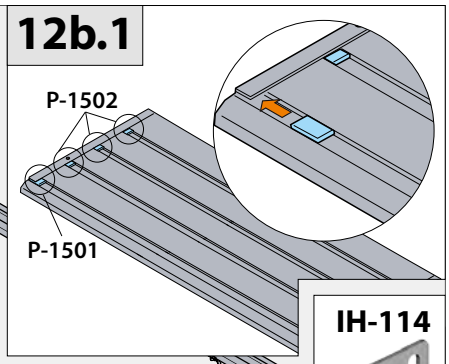

12b.2

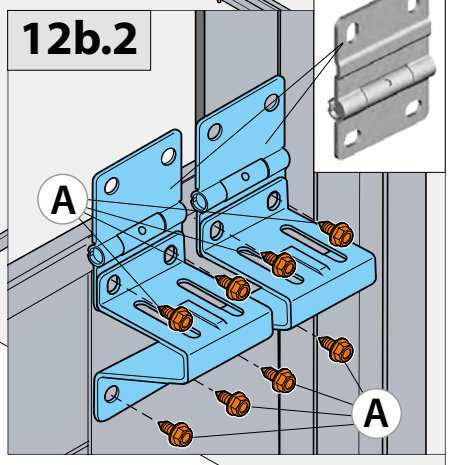

12b.3

12b.4

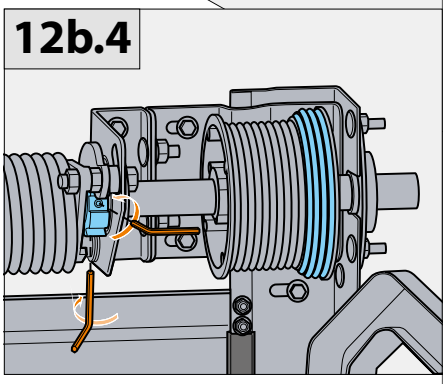

12b.5

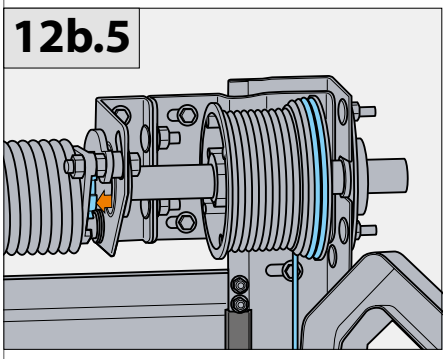

12b.6

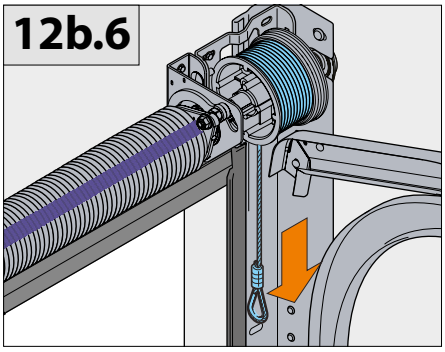

12b.7

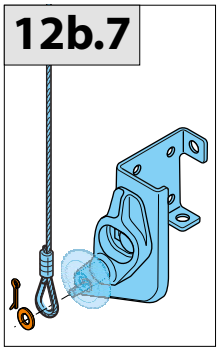

12b.8

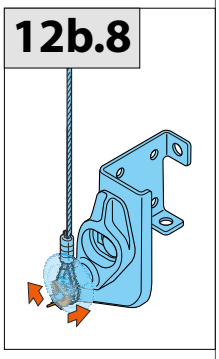

12b.9

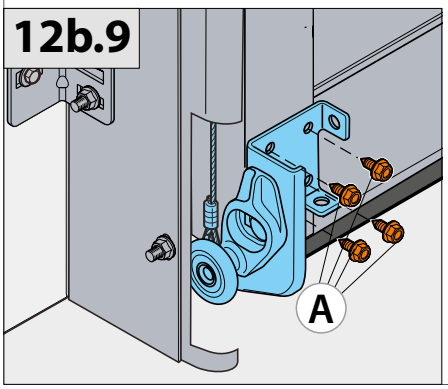

12b.10

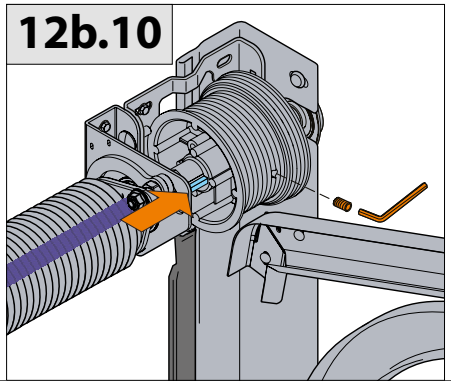

12b.11

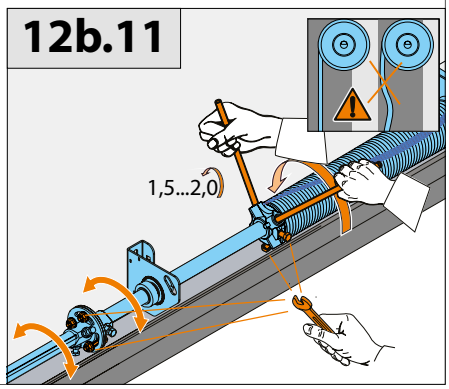

13a

≤5000 mm

13a.3a/13a.3b

13a.1

13a.3a/13a.3b

13a.2

13a.1

13a.1

A

13a.2

A

IH113

13a.3a

A

13a.3b

A

13b

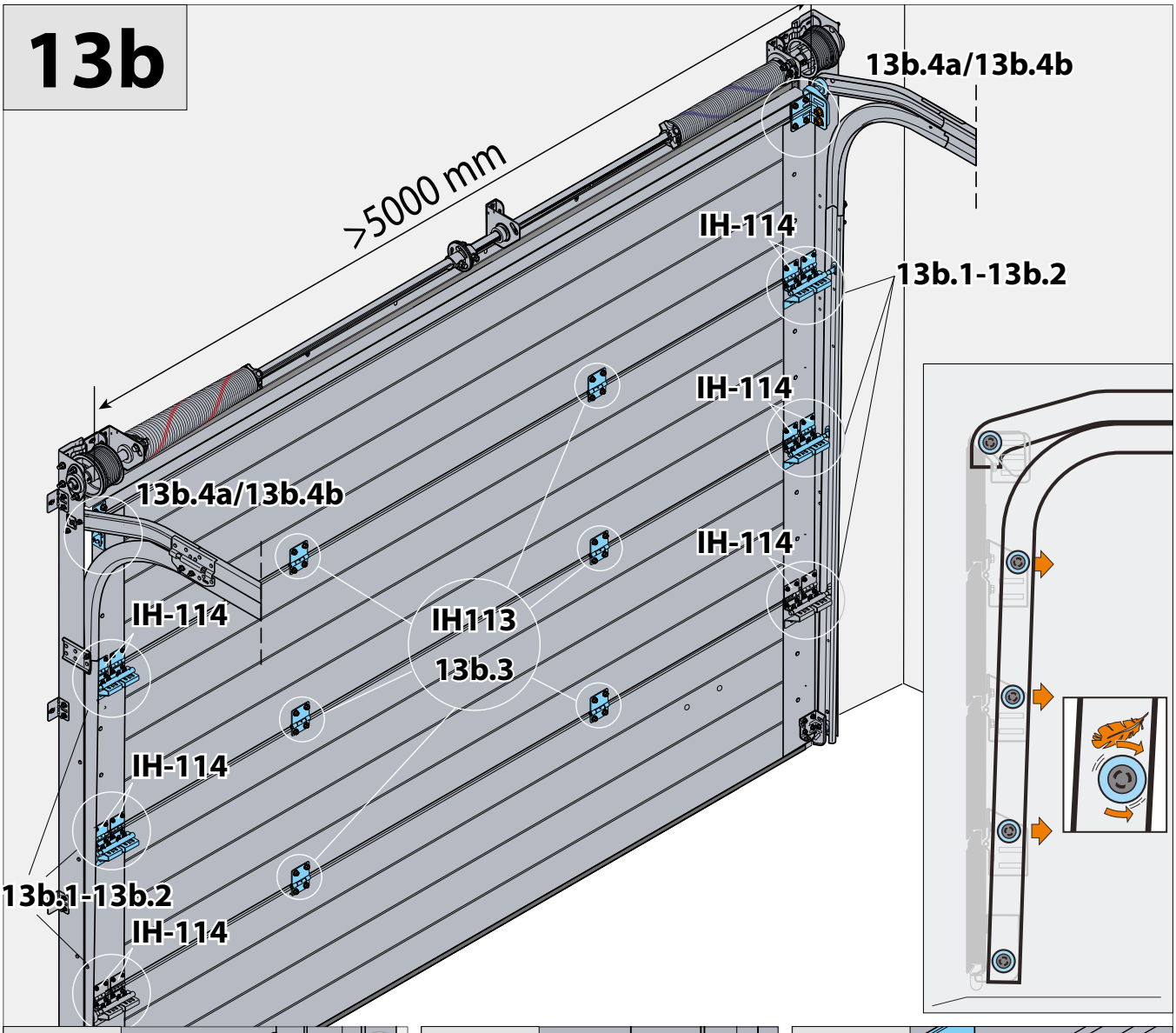

13b.1

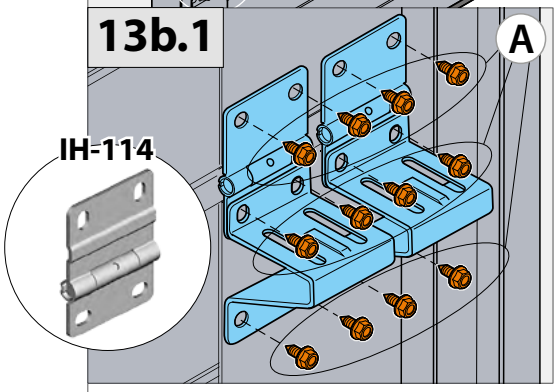

13b.2

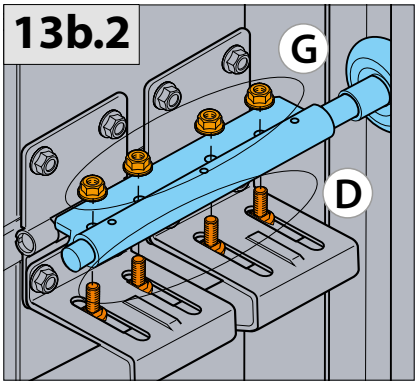

13b.3

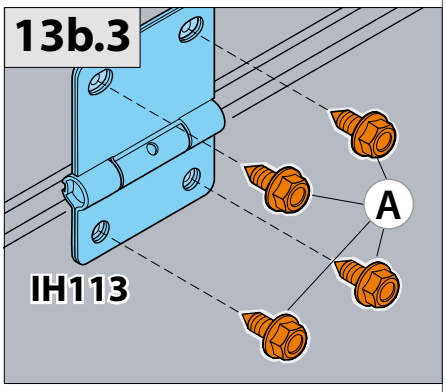

13b.4a

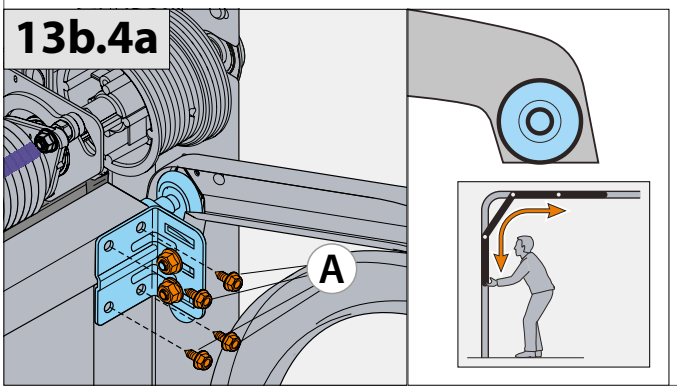

13b.4b

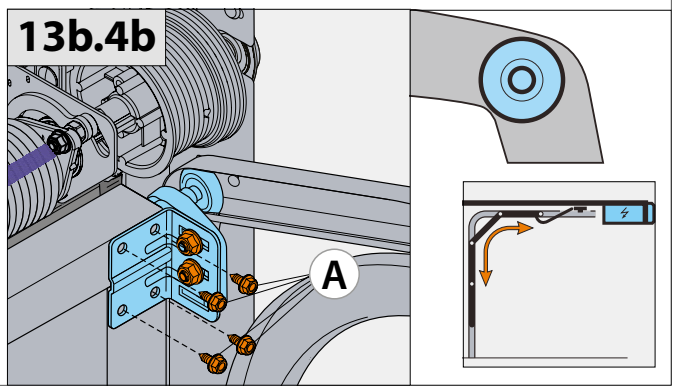

14

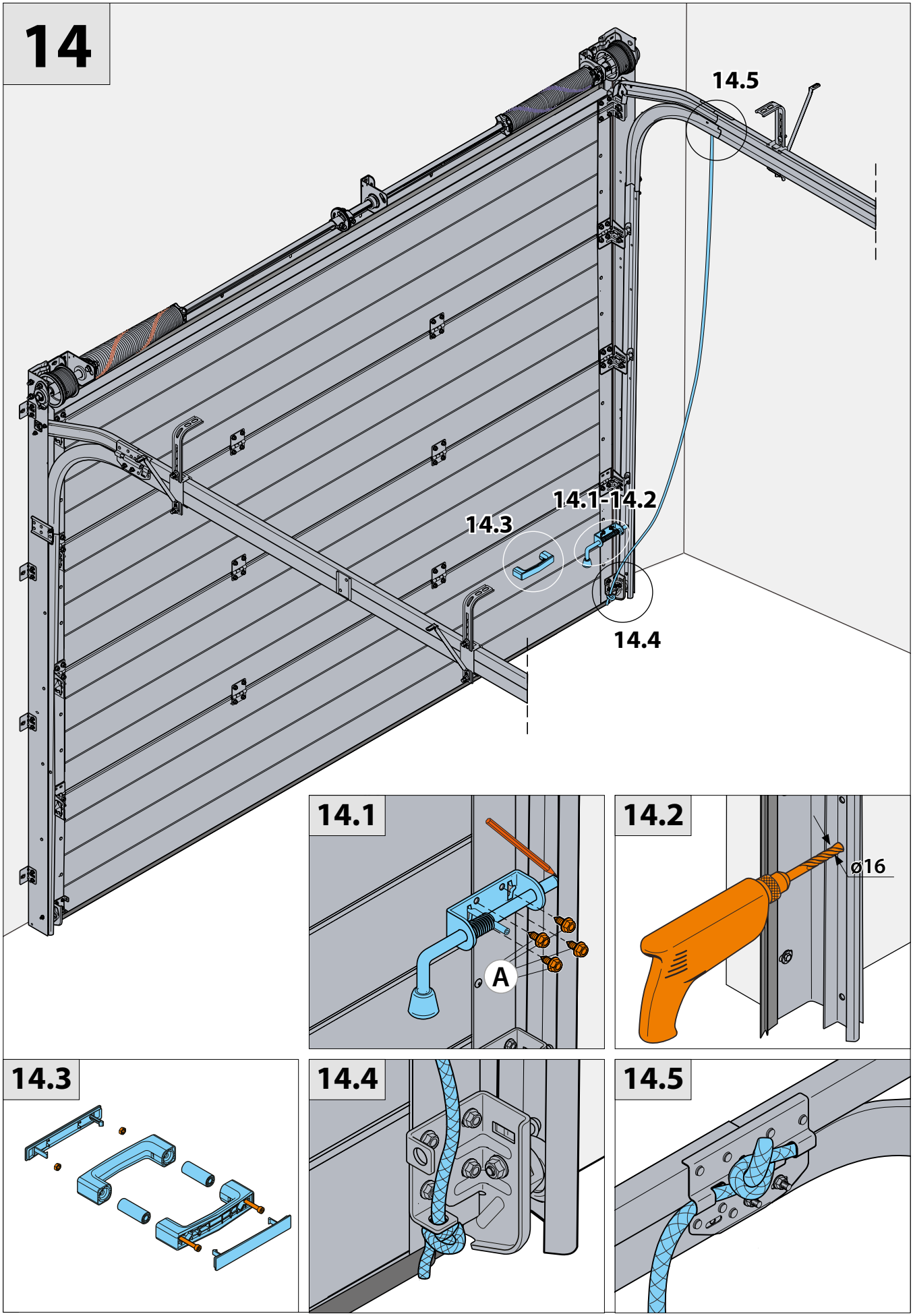

15

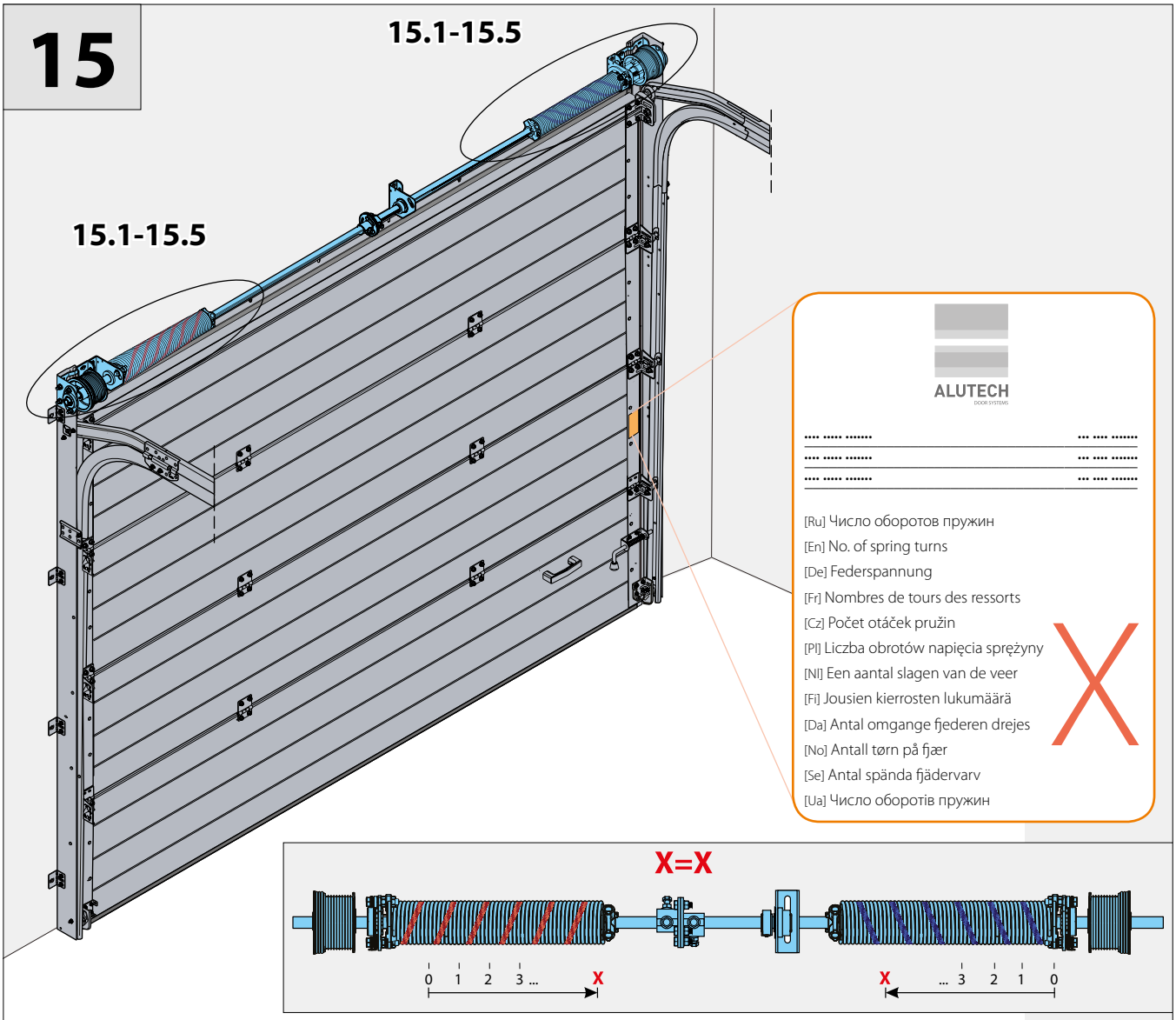

15.1

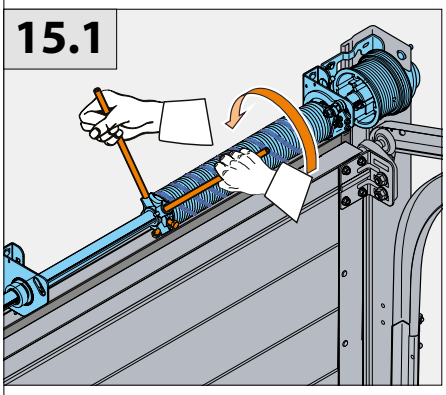

15.2

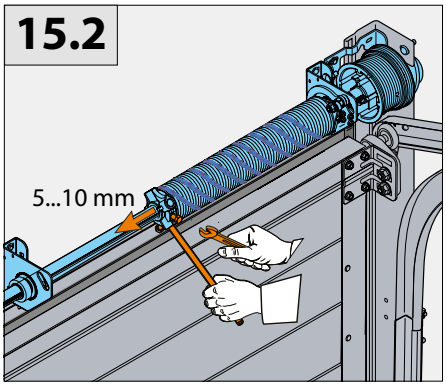

15.3

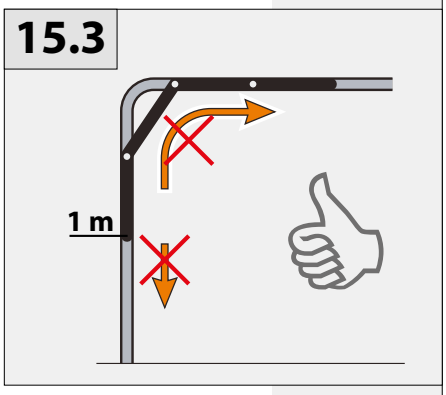

14.4

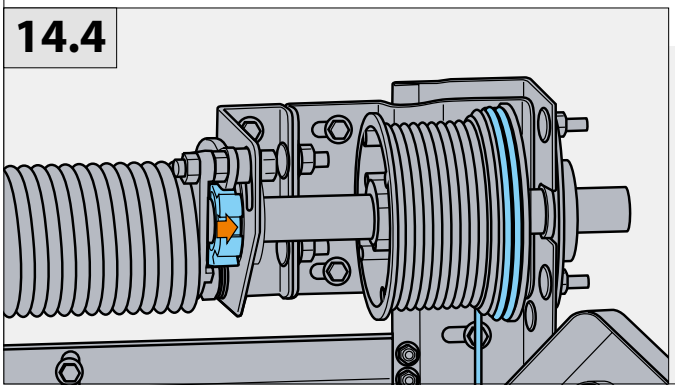

14.5

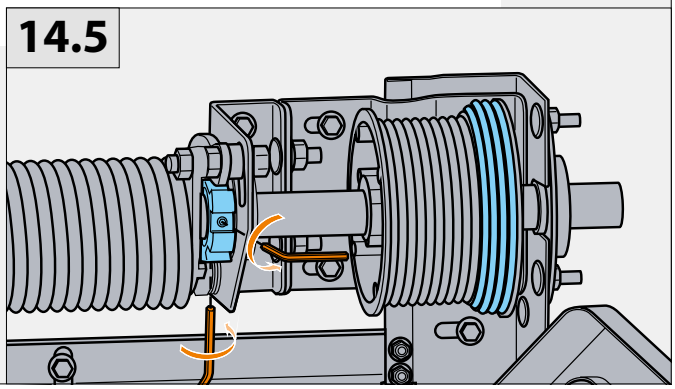

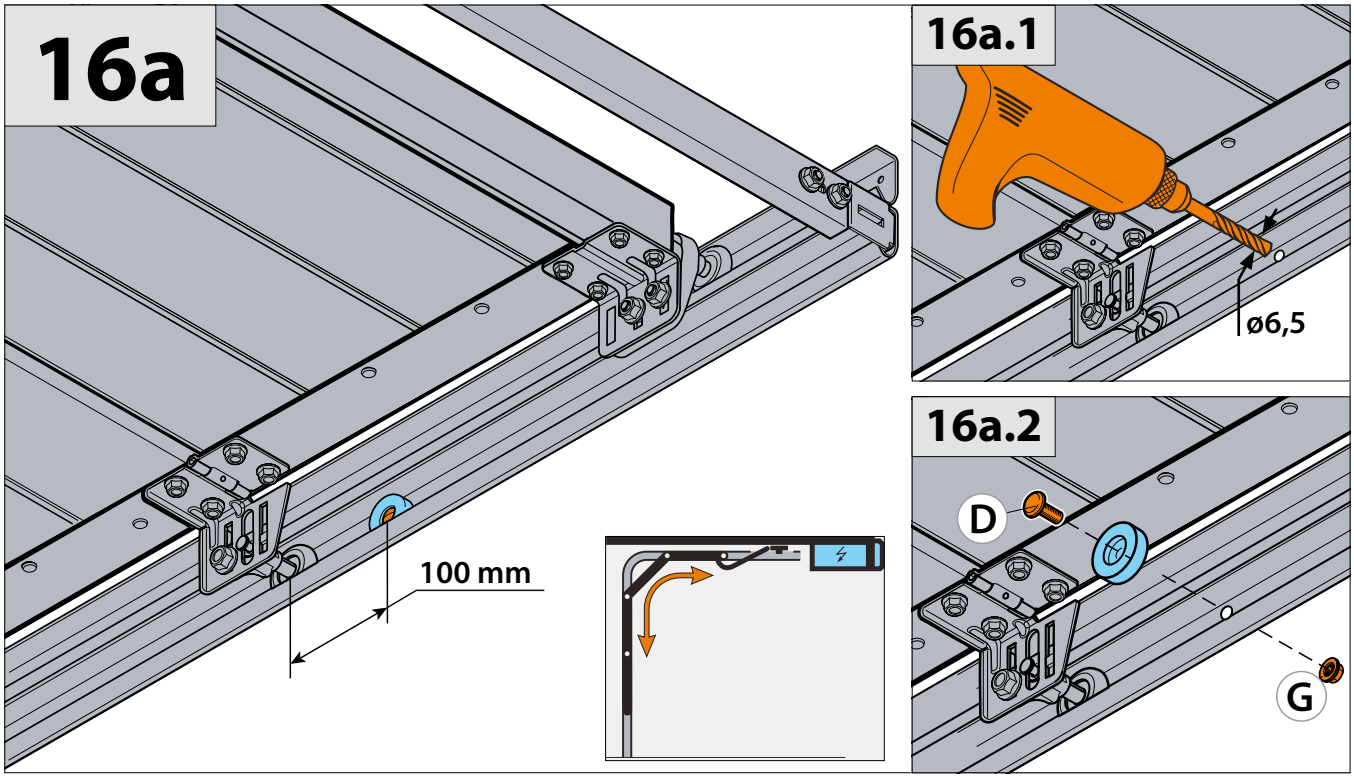
16a
100 mm
16a.1
ø6,5
16a.2
D
G

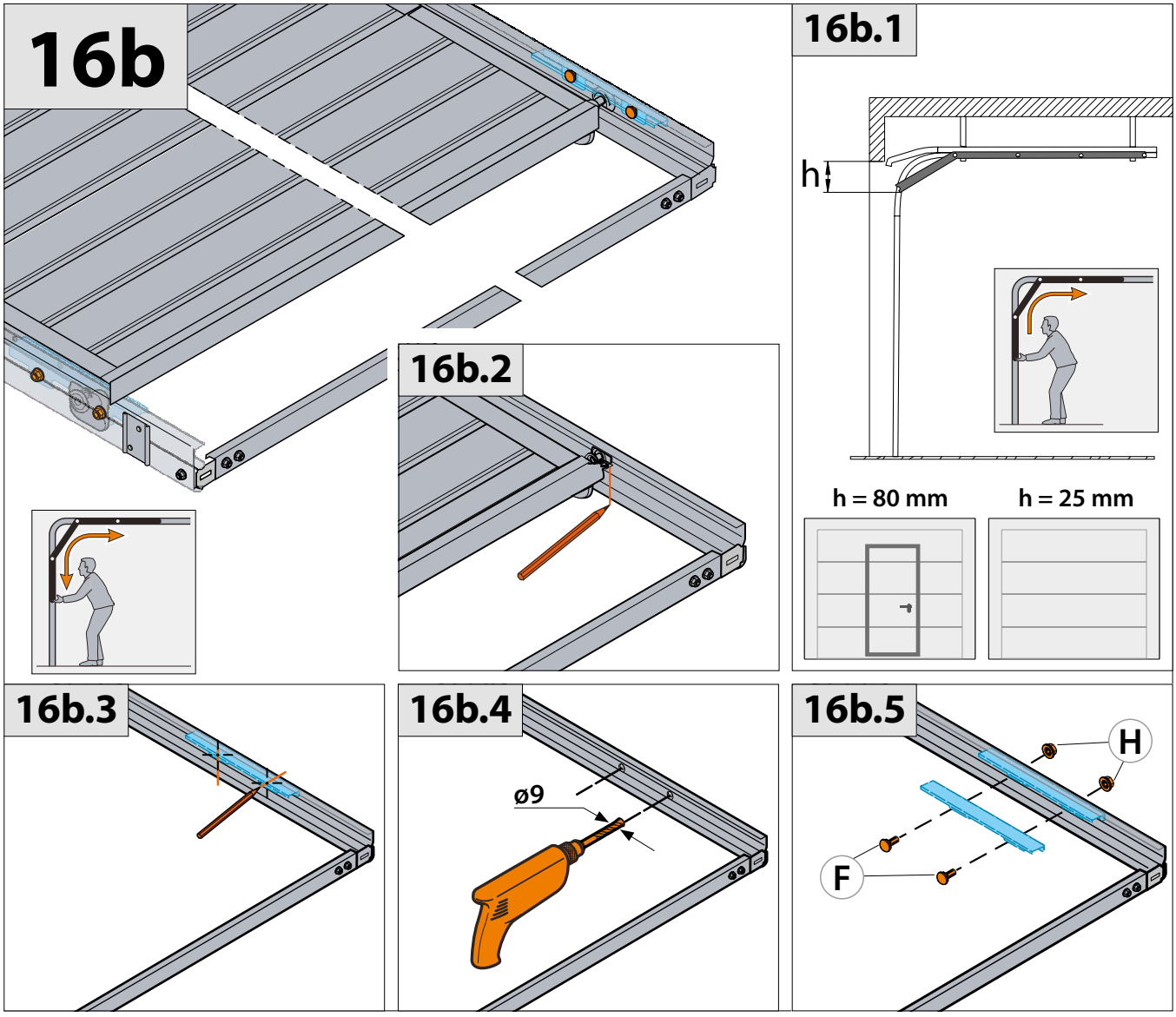
16b
16b.1
h
h = 80 mm
h = 25 mm
16b.2
16b.3
16b.4
ø9
16b.5
H
F

17

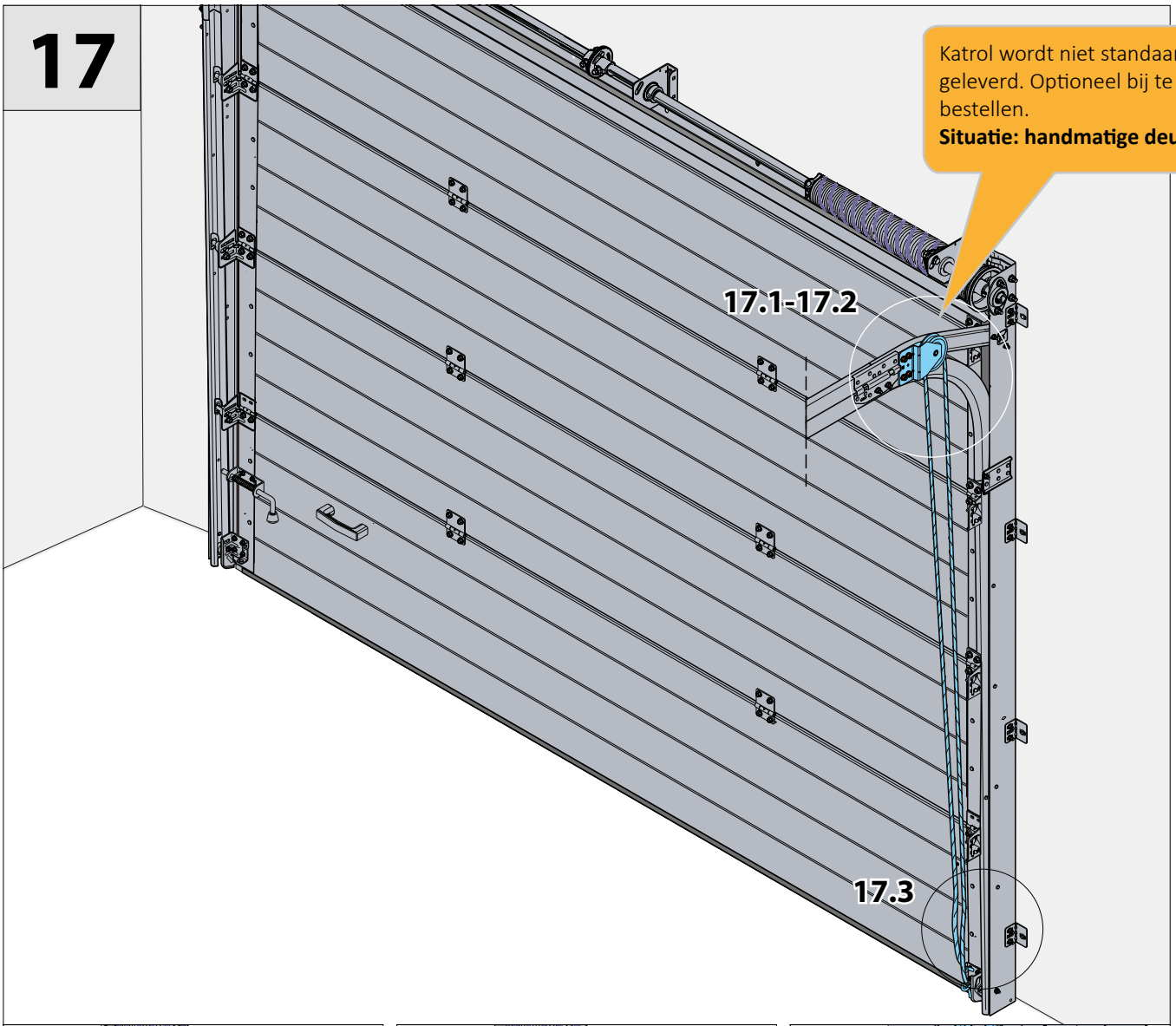

17.1

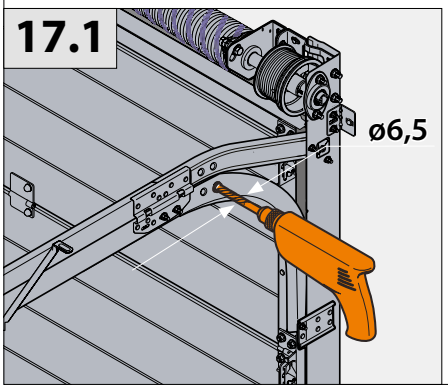

17.2

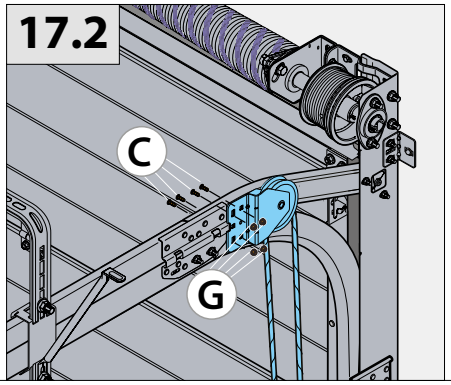

17.3

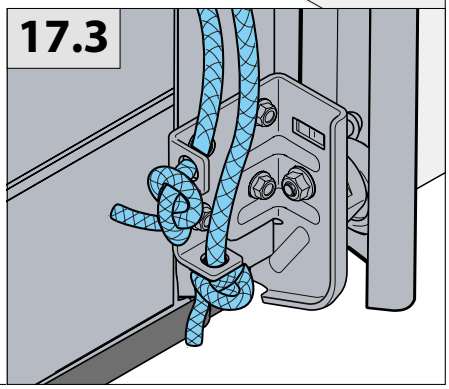

18

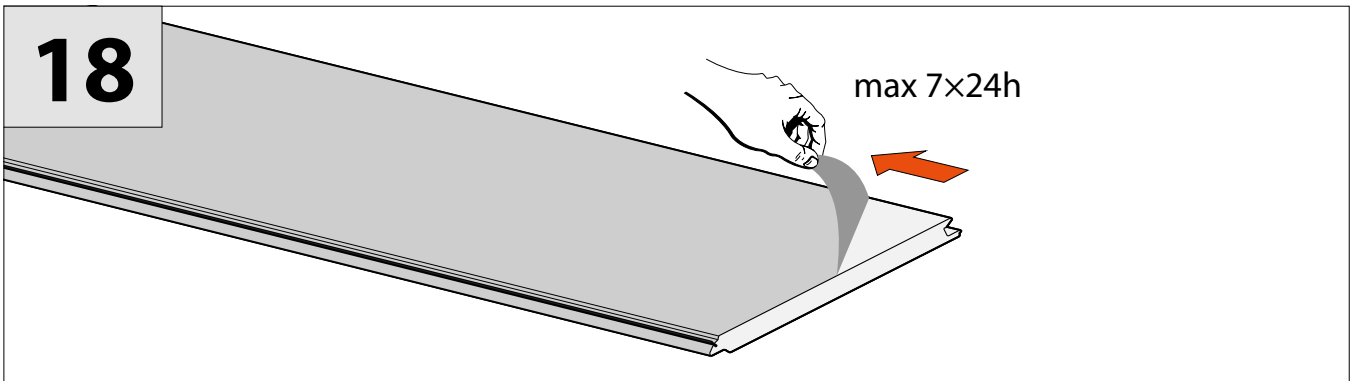

19

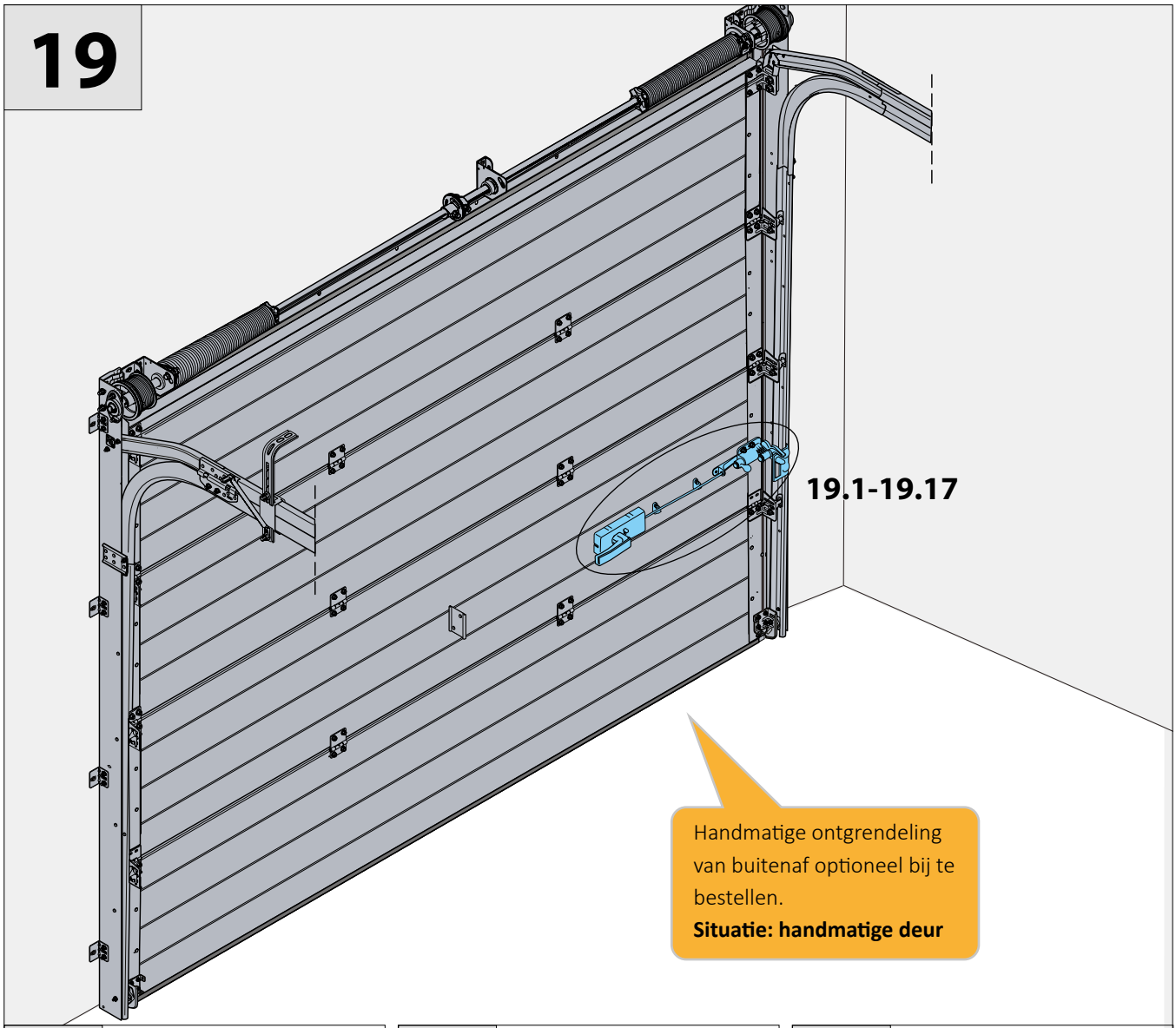

19.1

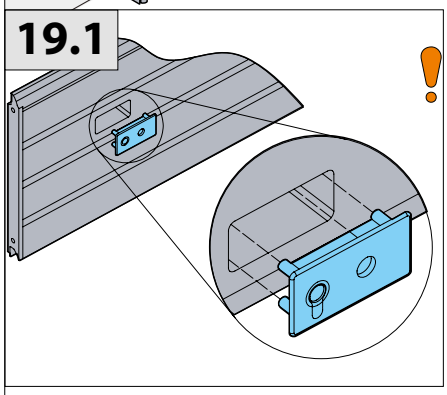

19.2

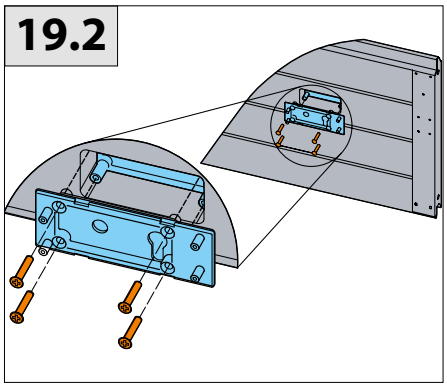

19.3

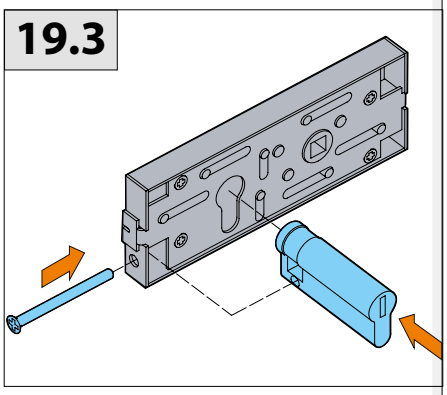

19.4

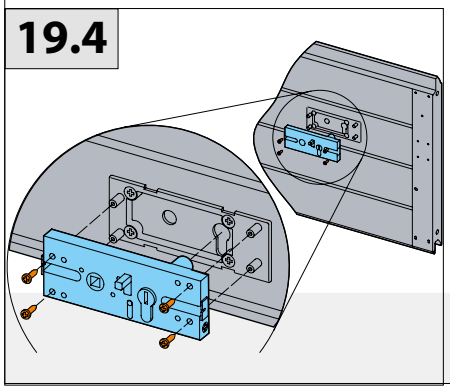

19.5

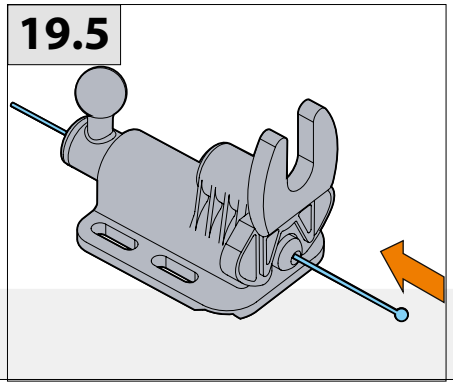

19.6

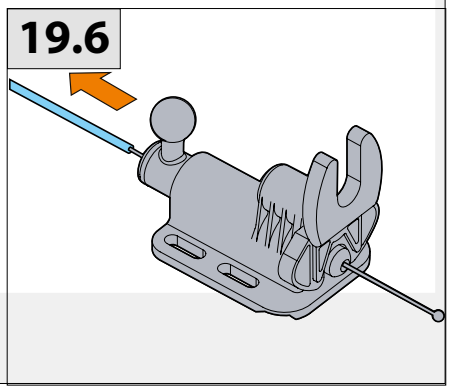

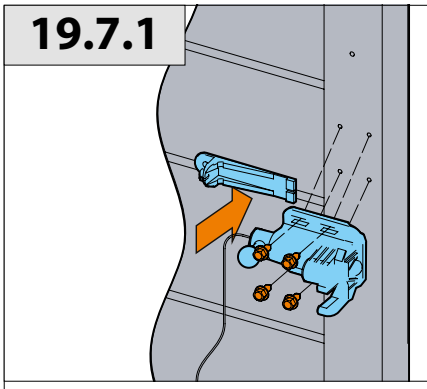
19.7.1

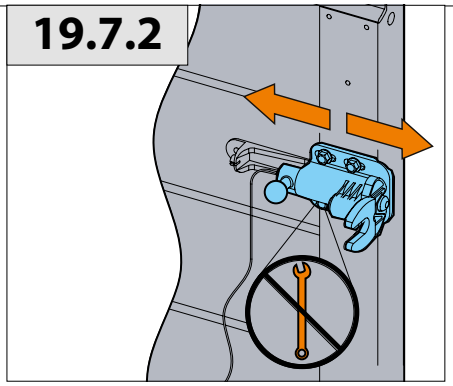
19.7.2

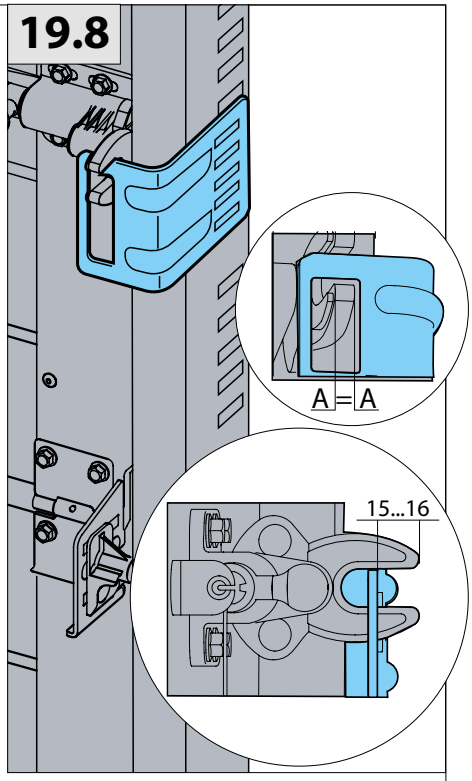
19.8
A=A
15...16

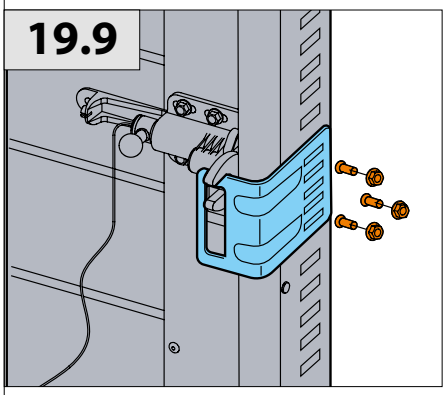
19.9

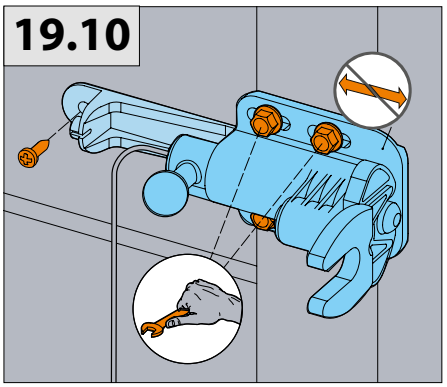
19.10

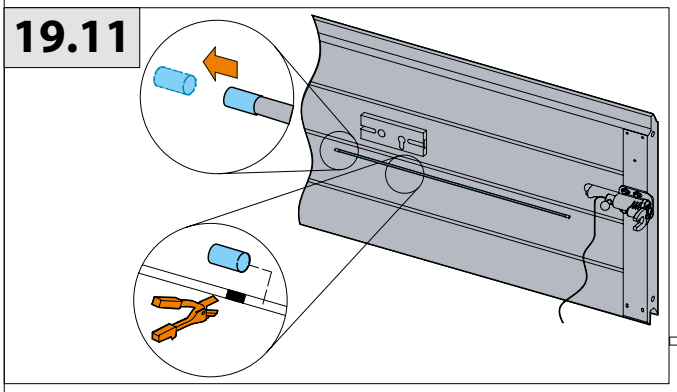
19.11

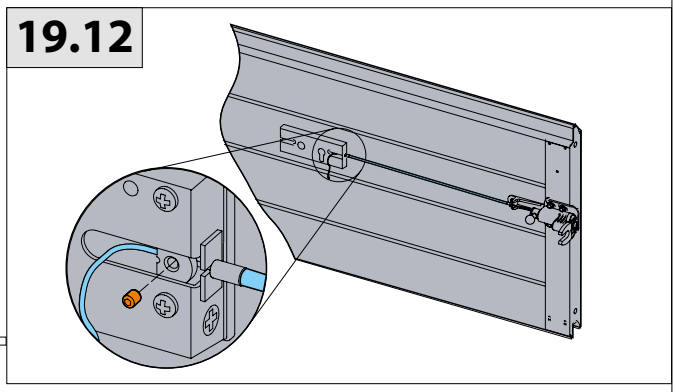
19.12

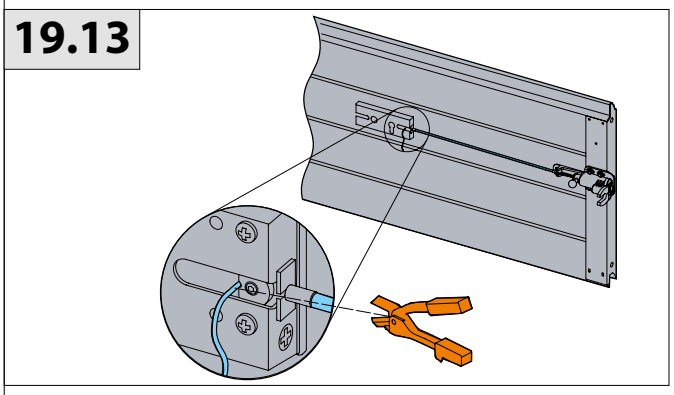
19.13

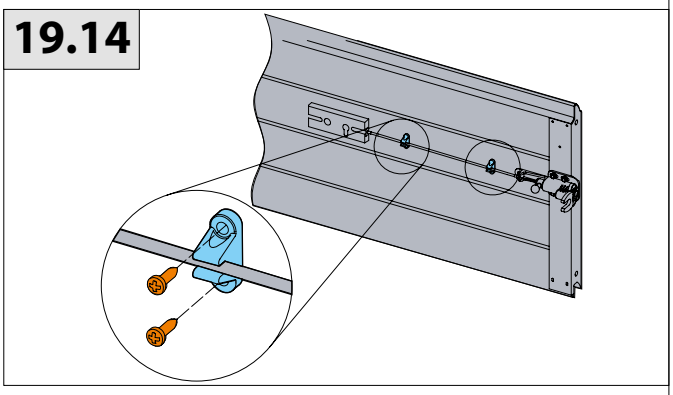
19.14

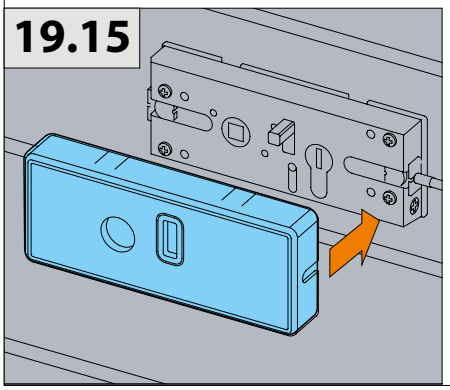
19.15

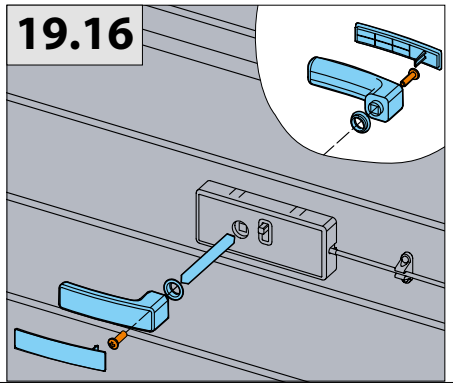
19.16

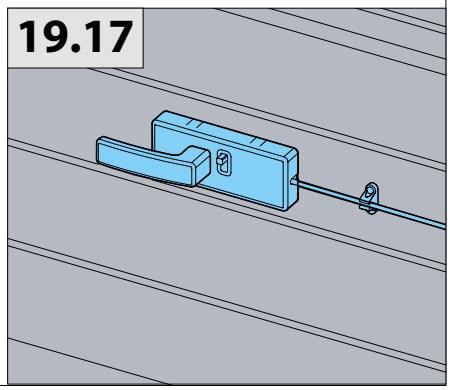
19.17

20

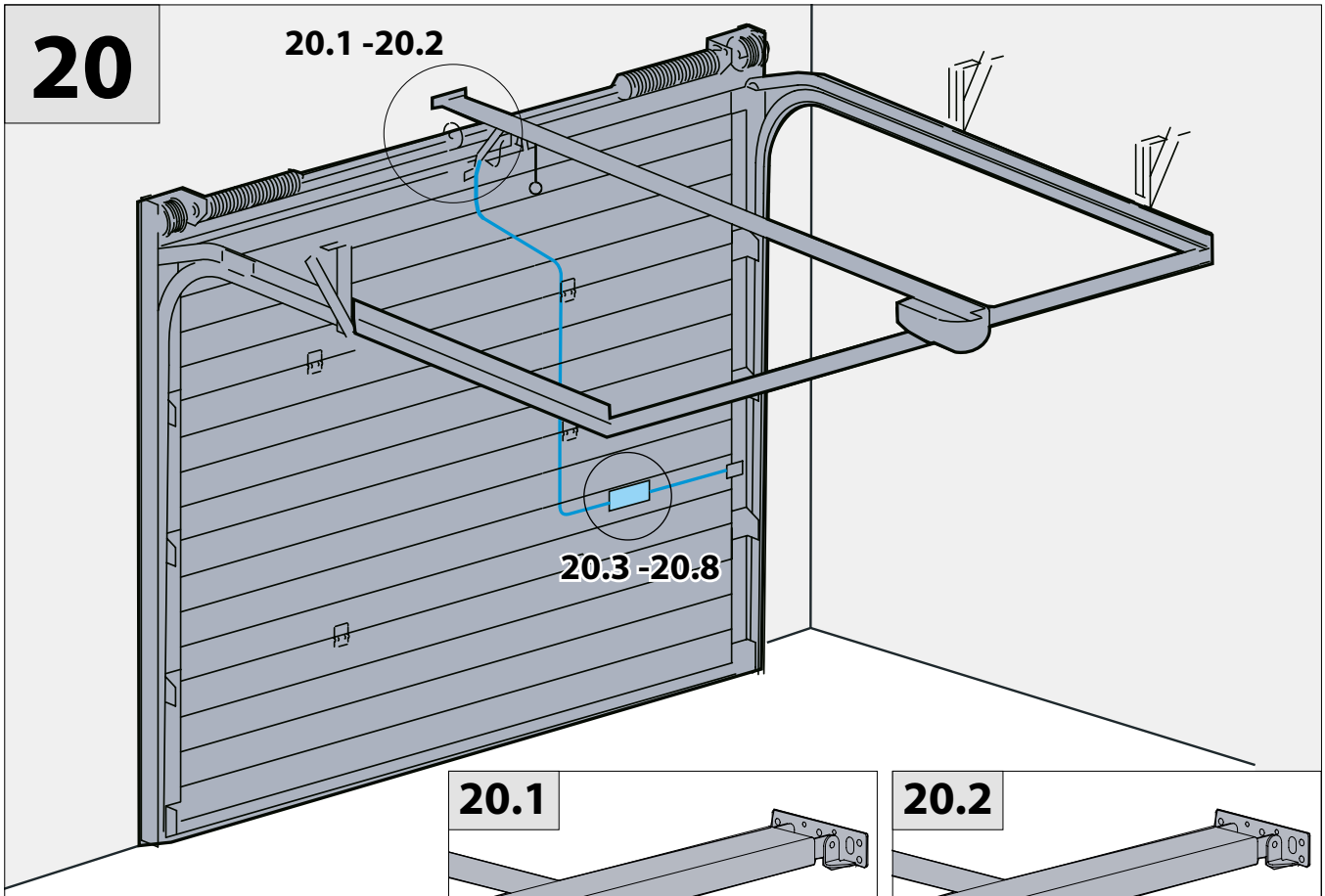

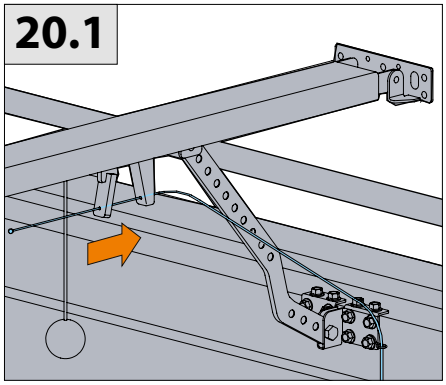

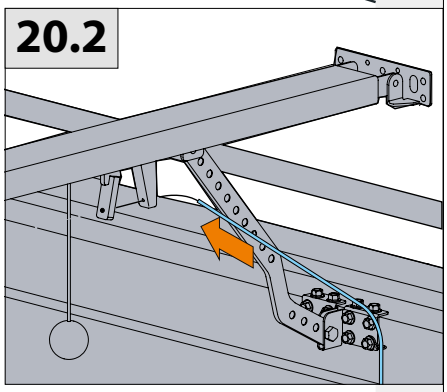

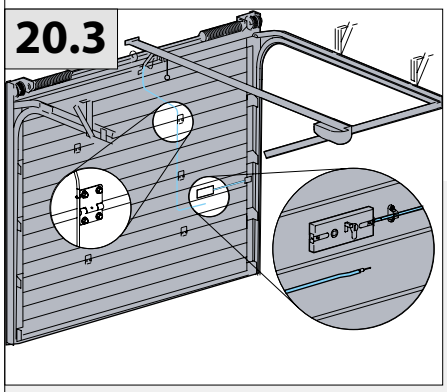

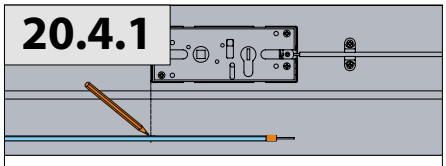

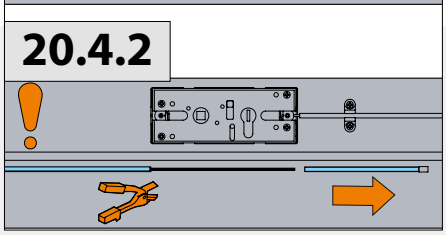

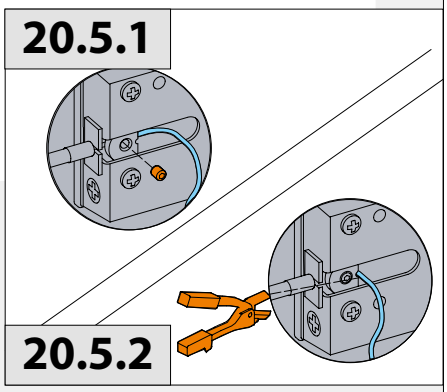

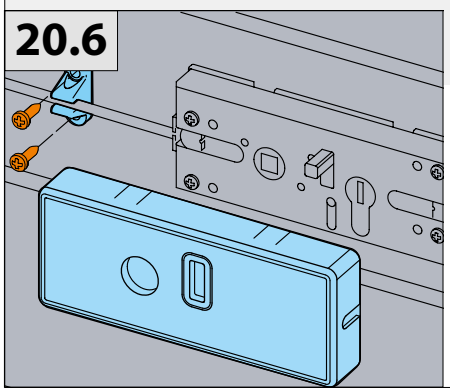

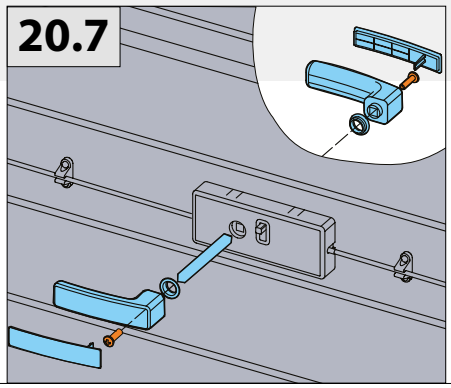

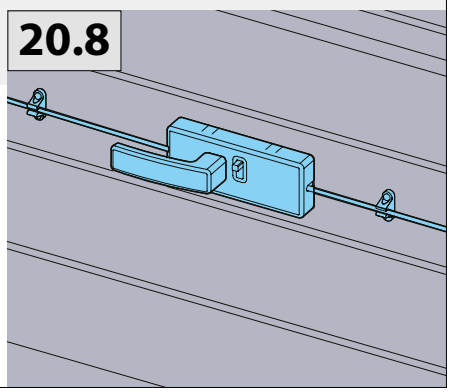

21

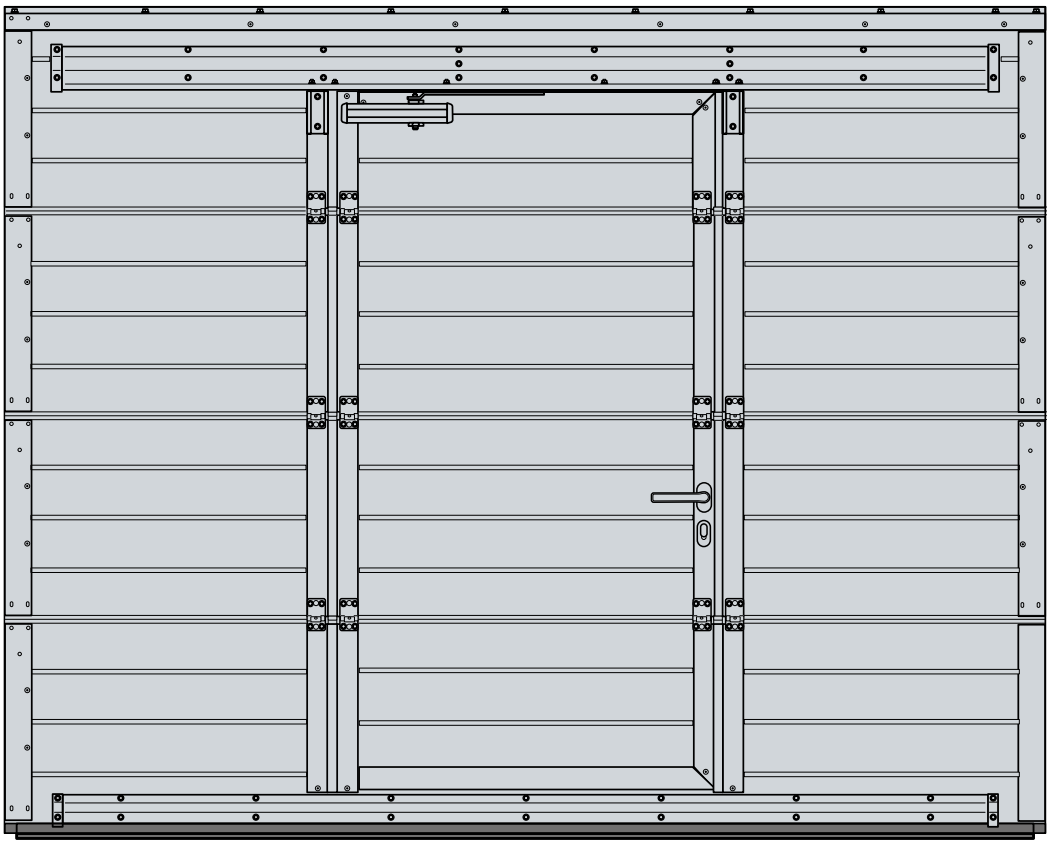

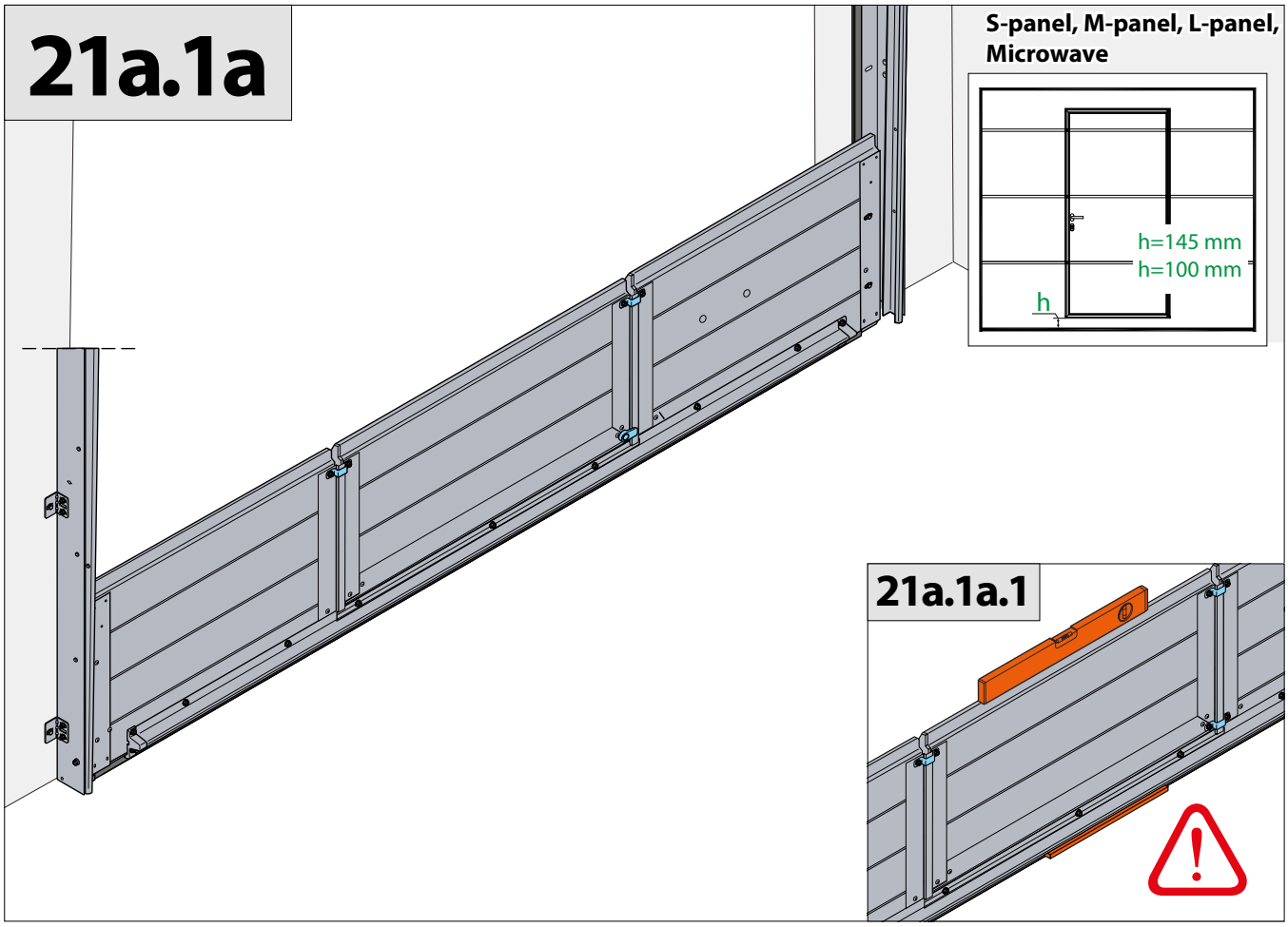
21a.1a
S-panel, M-panel, L-panel, Microwave
h=145 mm
h=100 mm
h
21a.1a.1

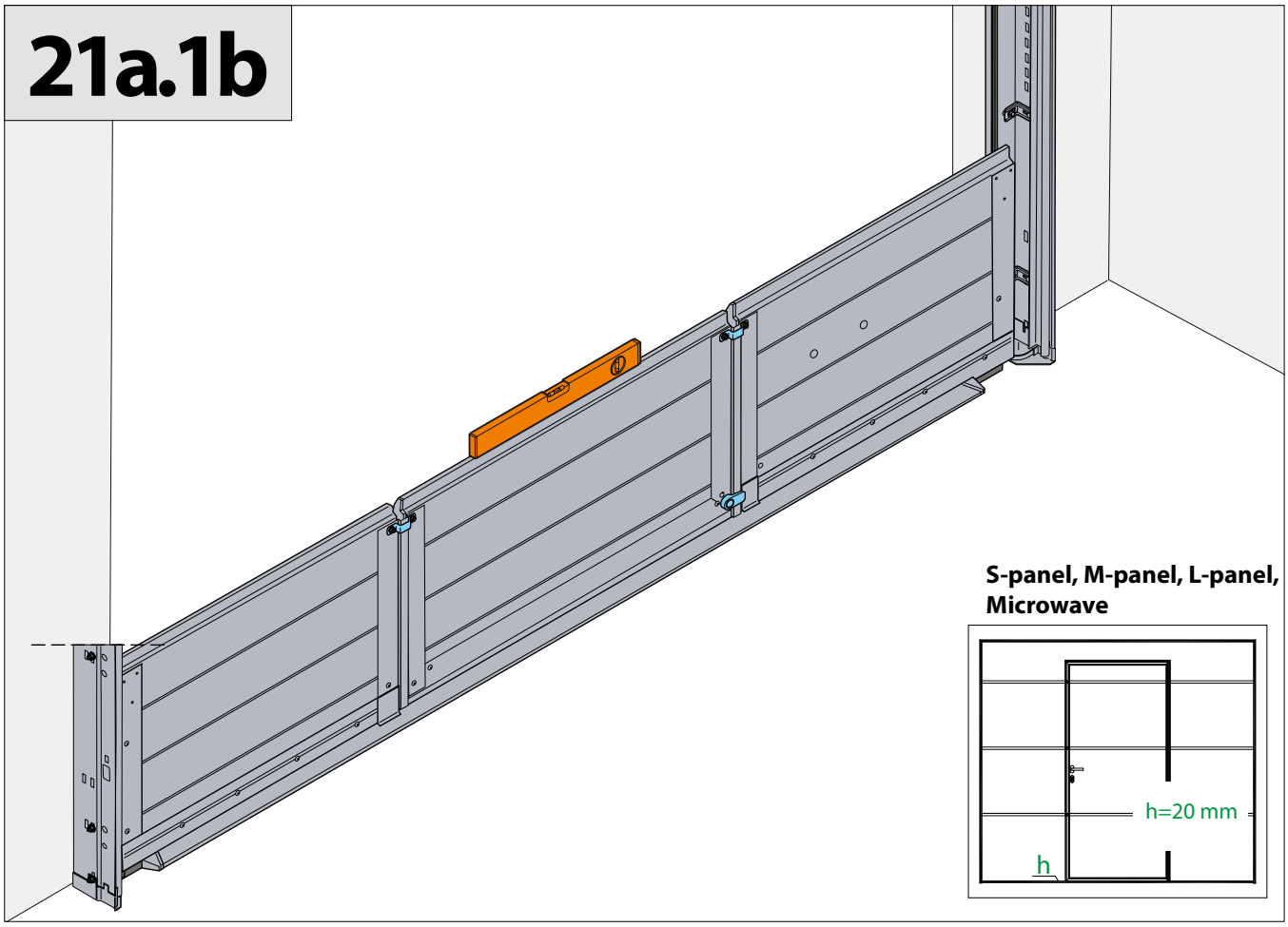
21a.1b
S-panel, M-panel, L-panel, Microwave
h=20 mm
h

21a.2

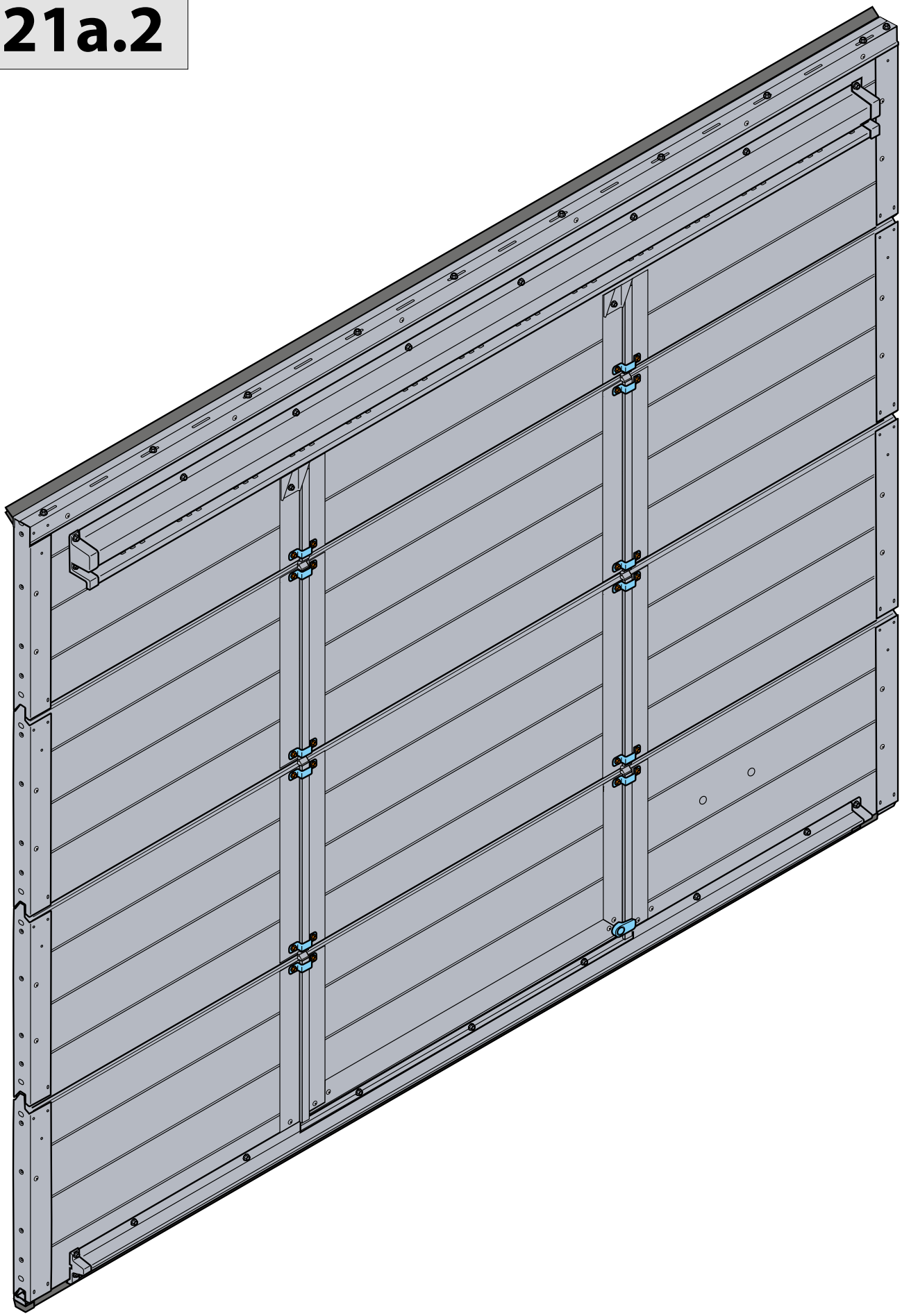

21a.3

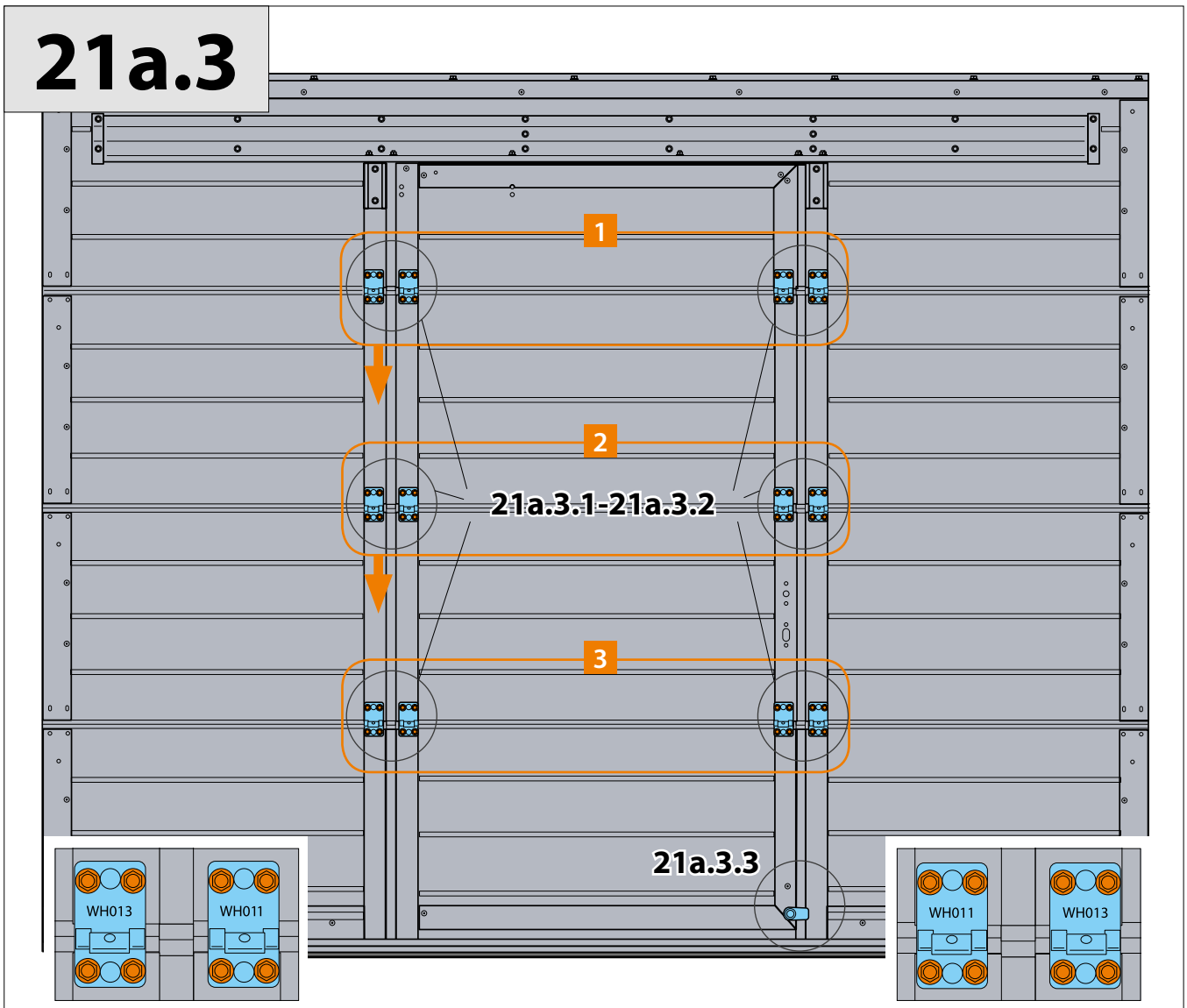

21a.3.1

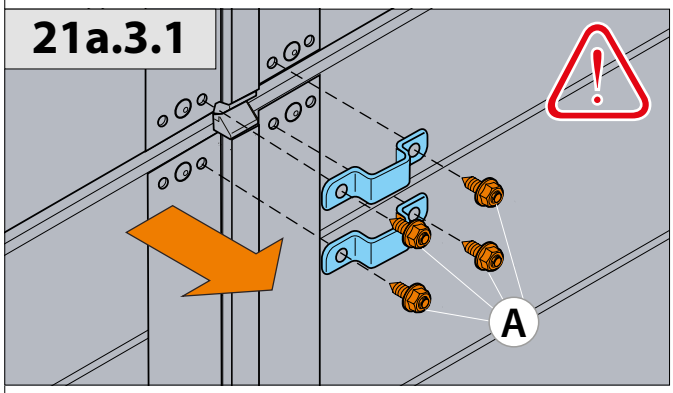

21a.3.2

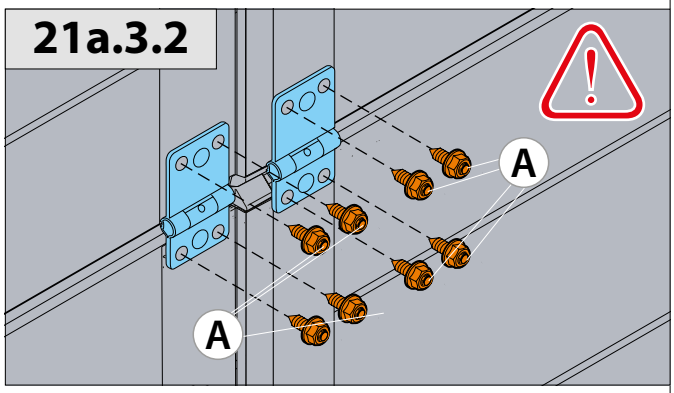

21a.3.3

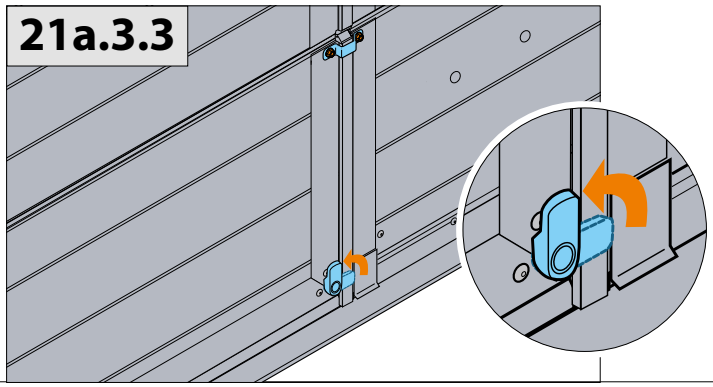

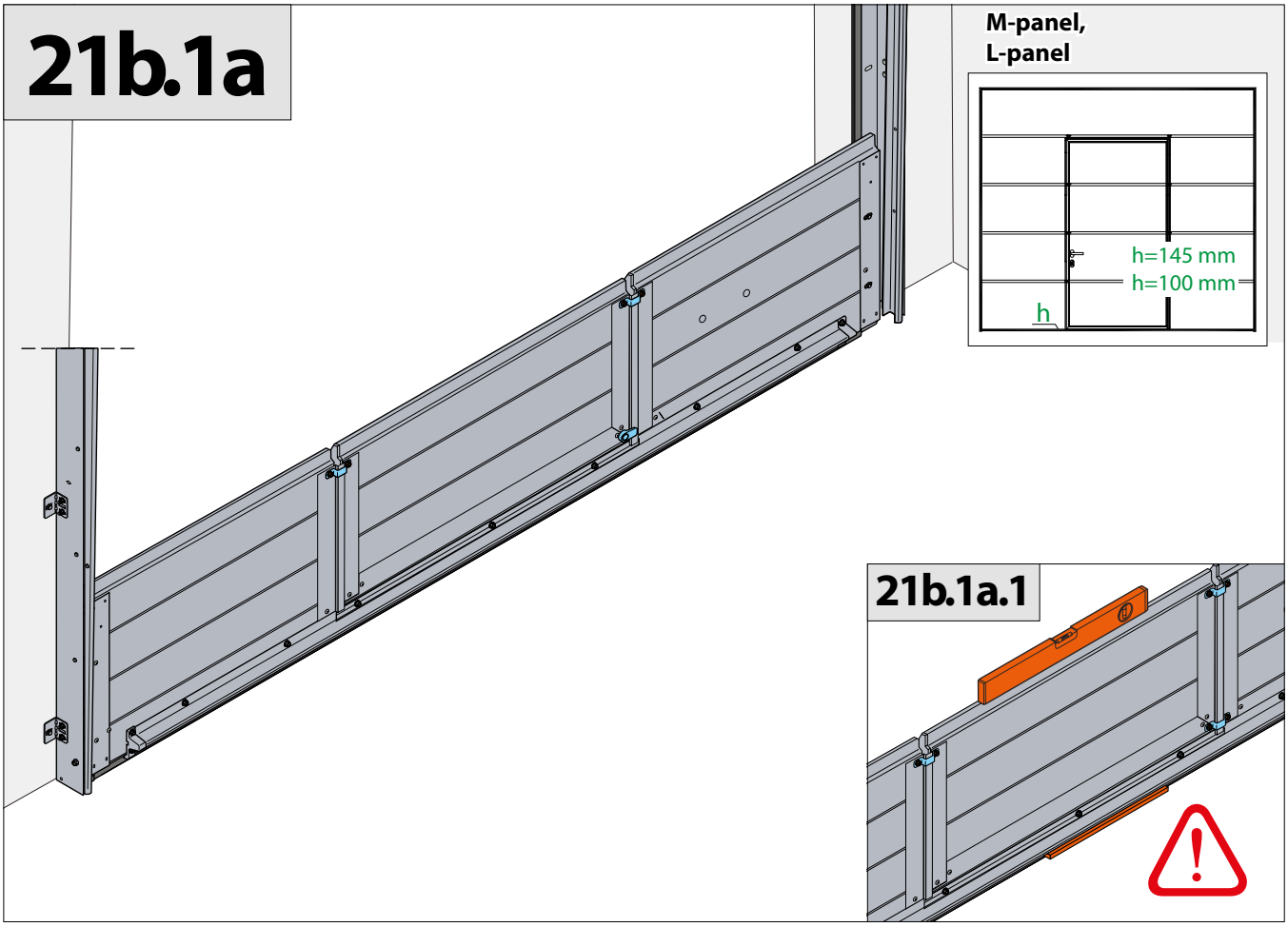
21b.1a
M-panel,
L-panel
h=145 mm
h=100 mm
h
21b.1a.1

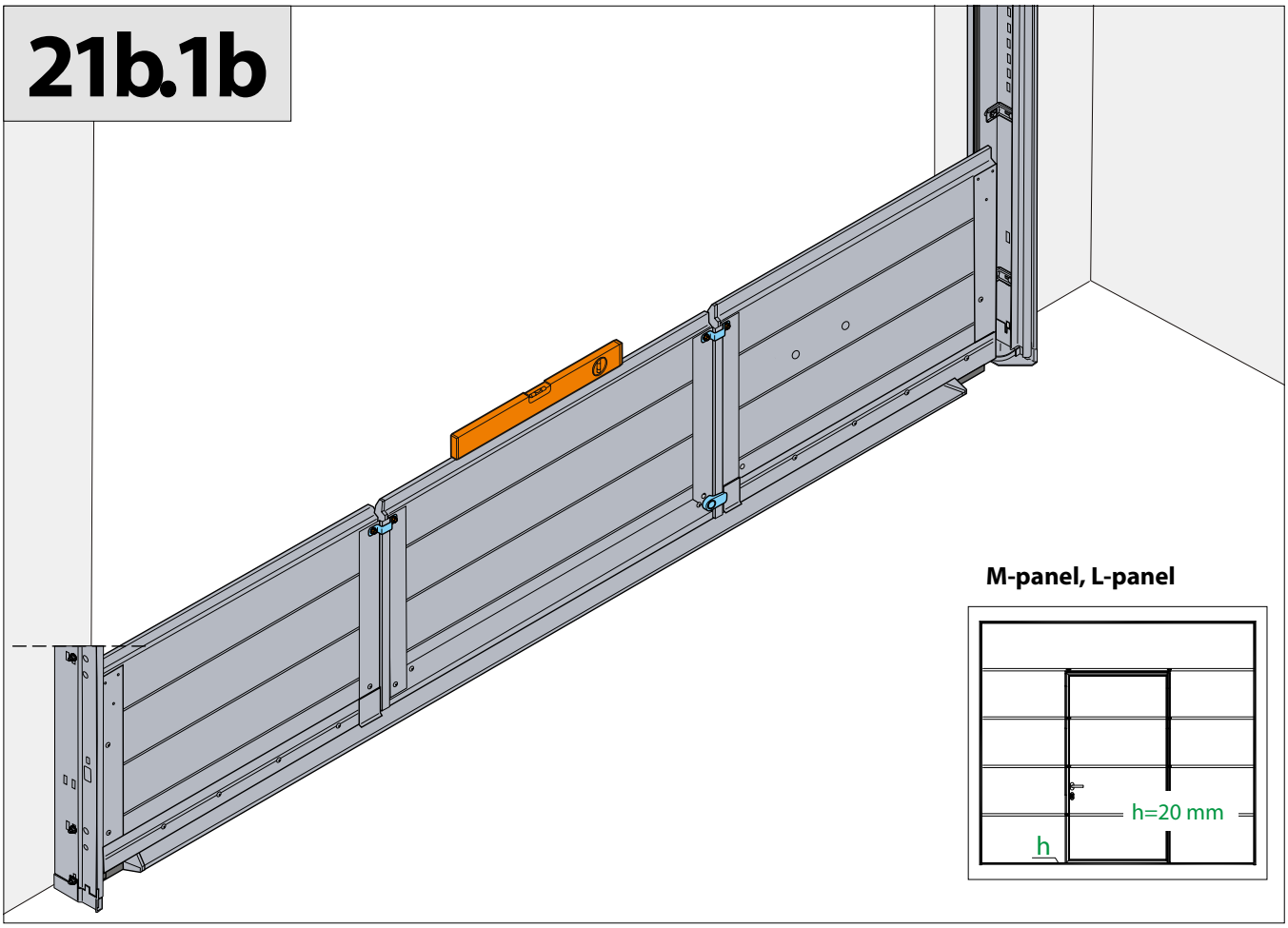
21b.1b
M-panel, L-panel
h=20 mm
h

21b.2

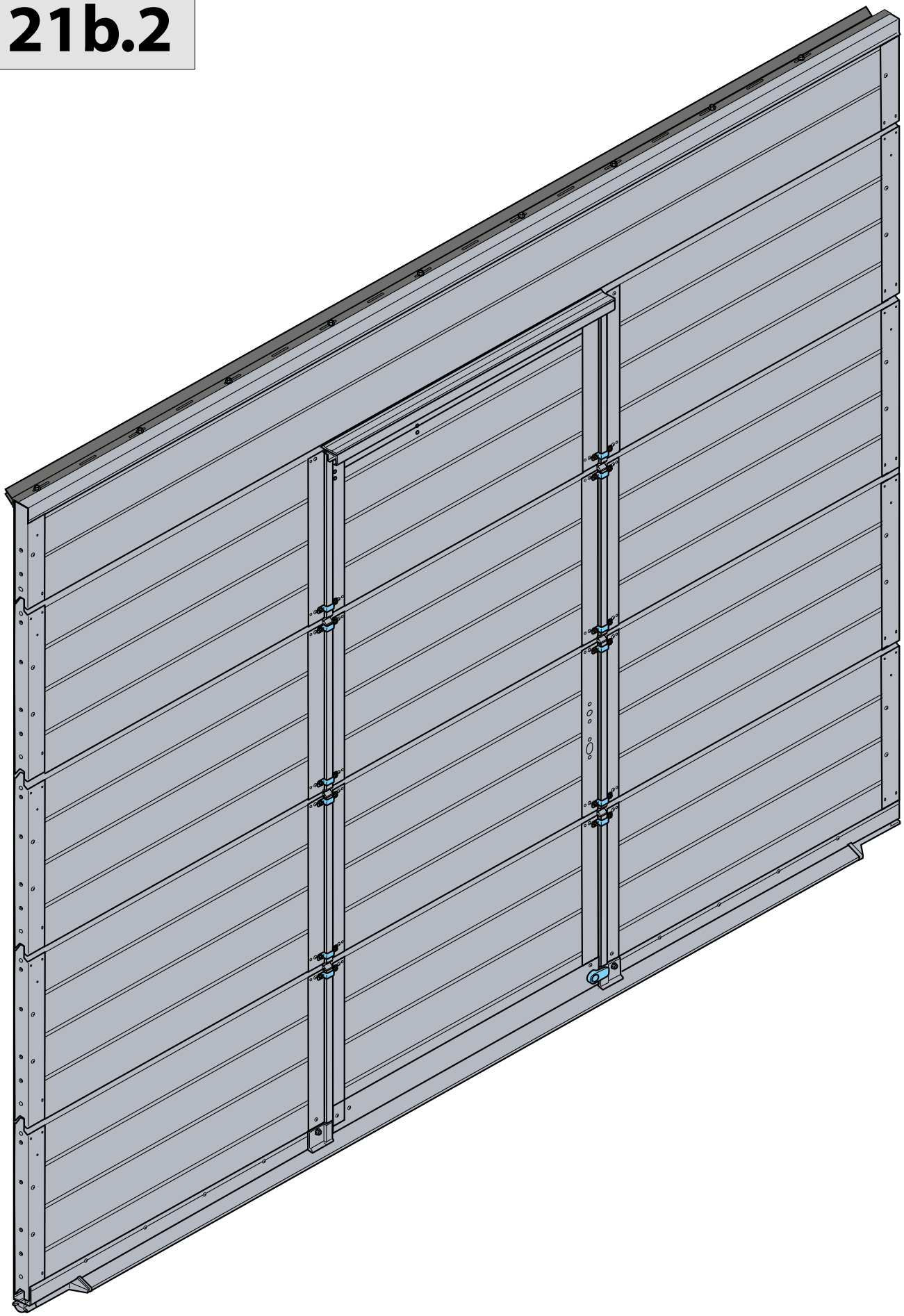

21b.3

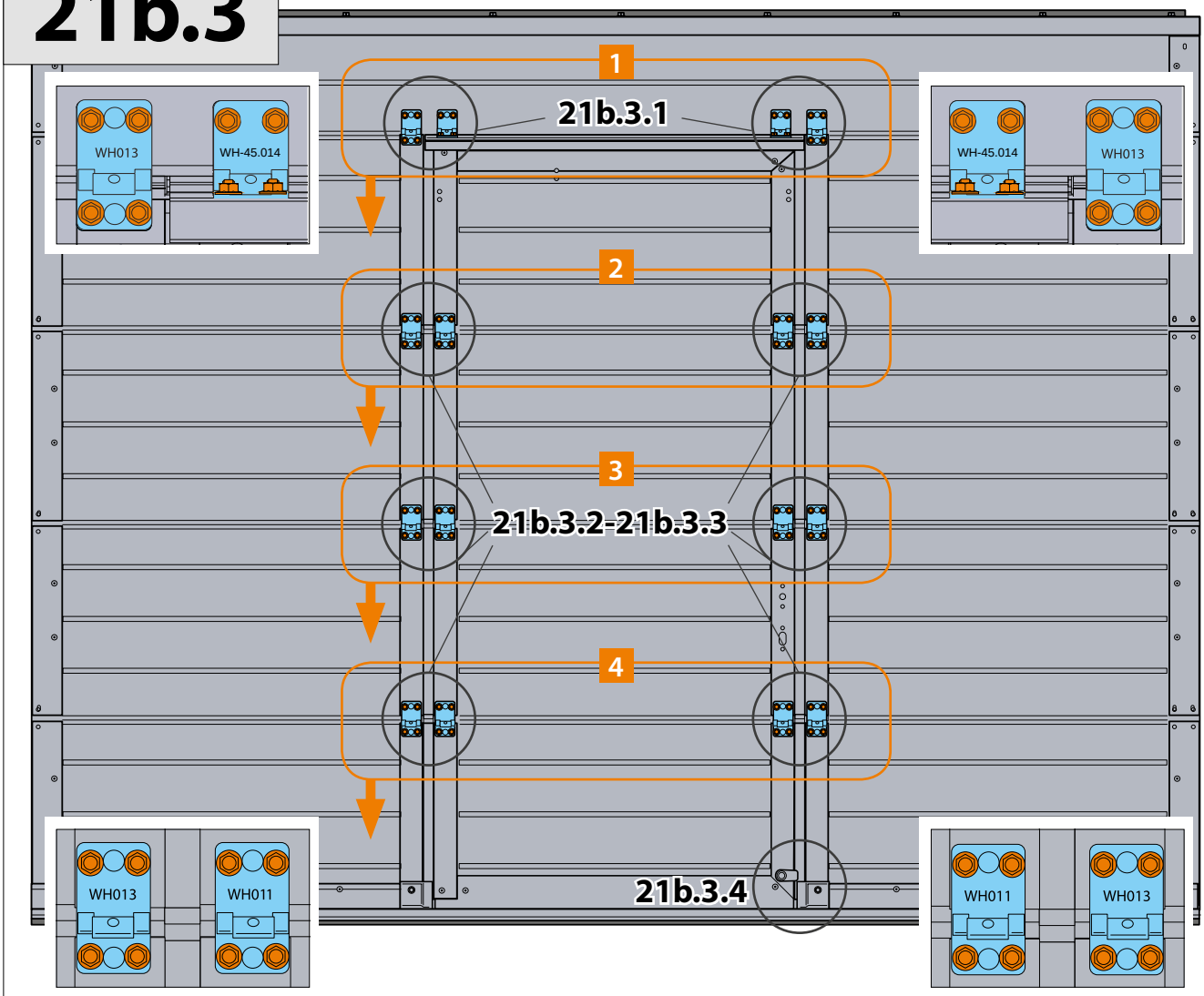

21b.3.1

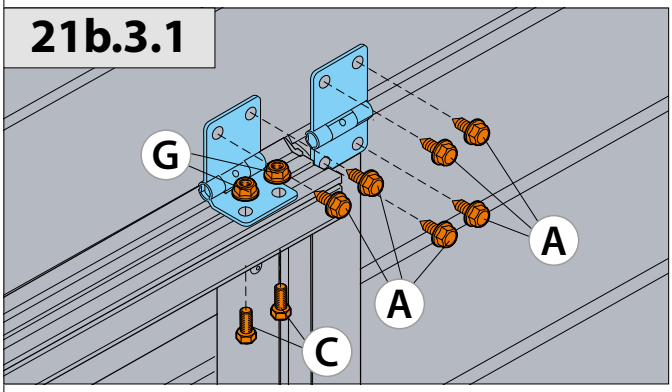

21b.3.2

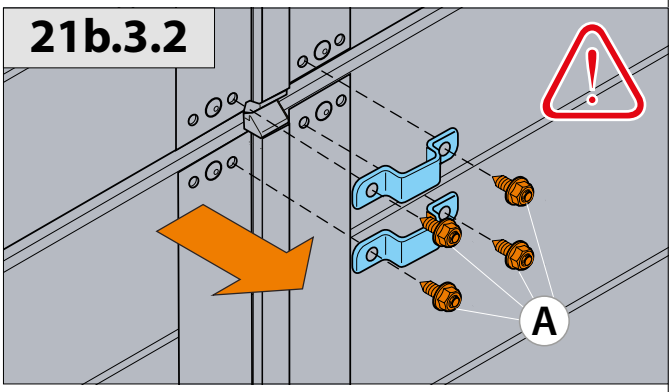

21b.3.3

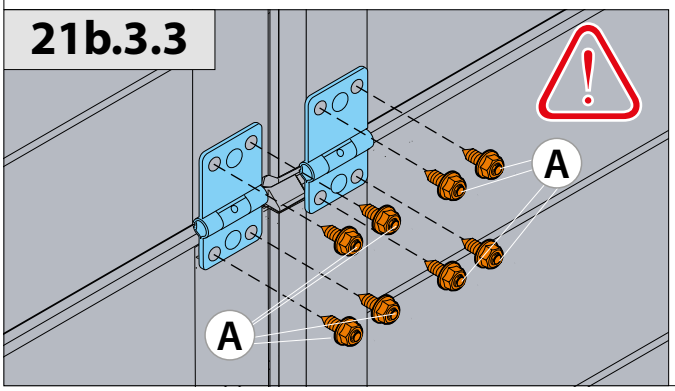

21b.3.4

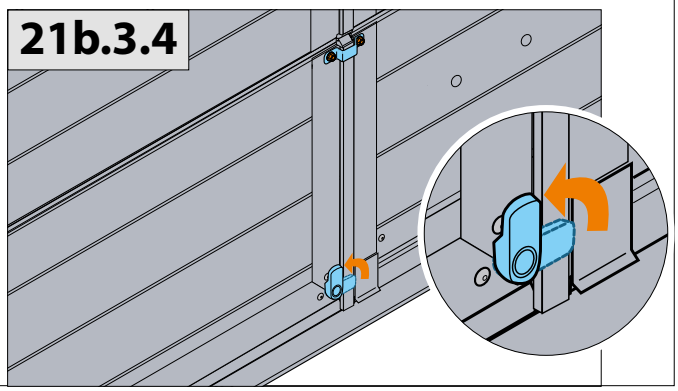

21.4

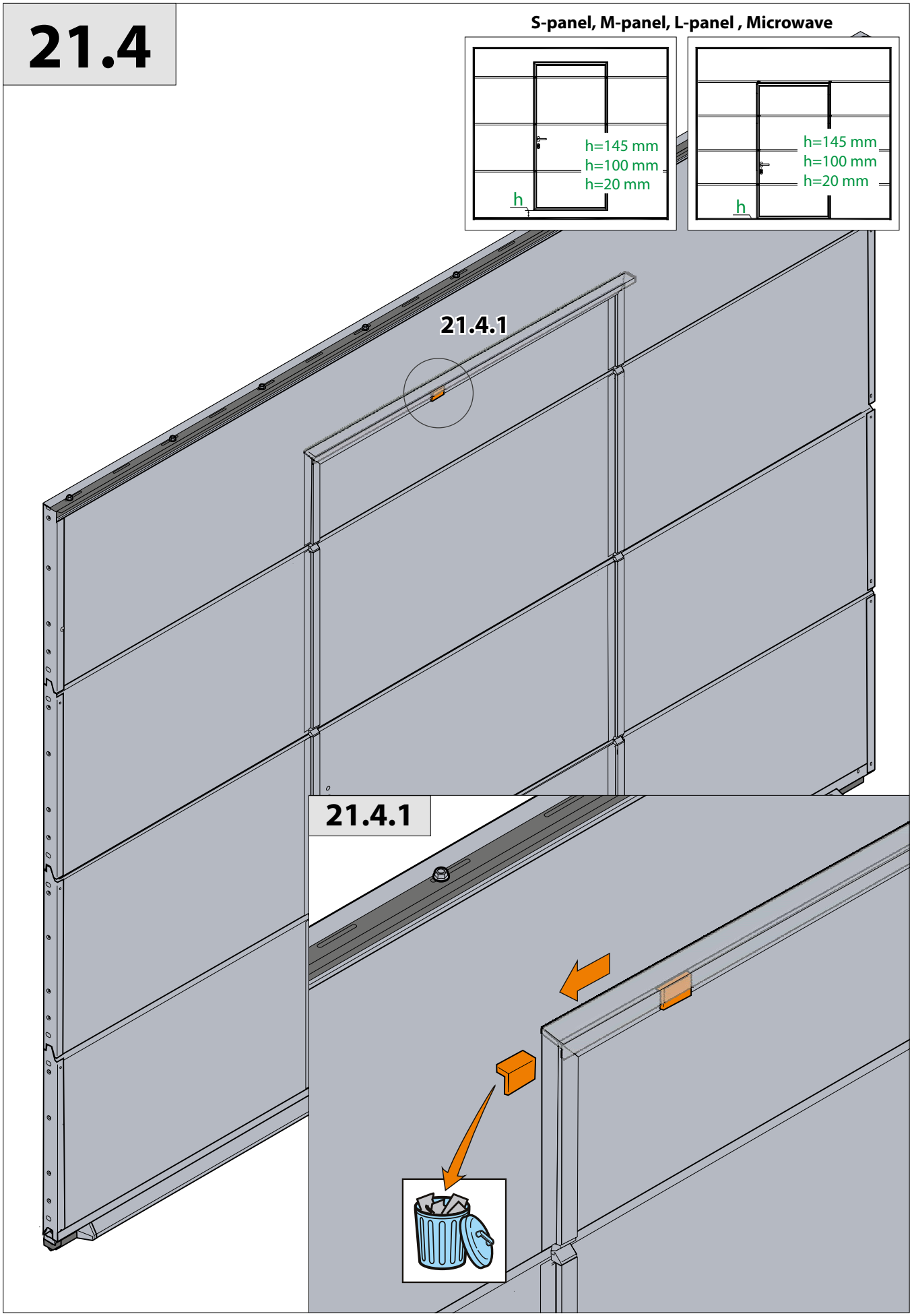
S-panel, M-panel, L-panel , Microwave
h=145 mm
h=100 mm
h=20 mm
h
h=145 mm
h=100 mm
h=20 mm
h
21.4.1
21.4.1

21.5

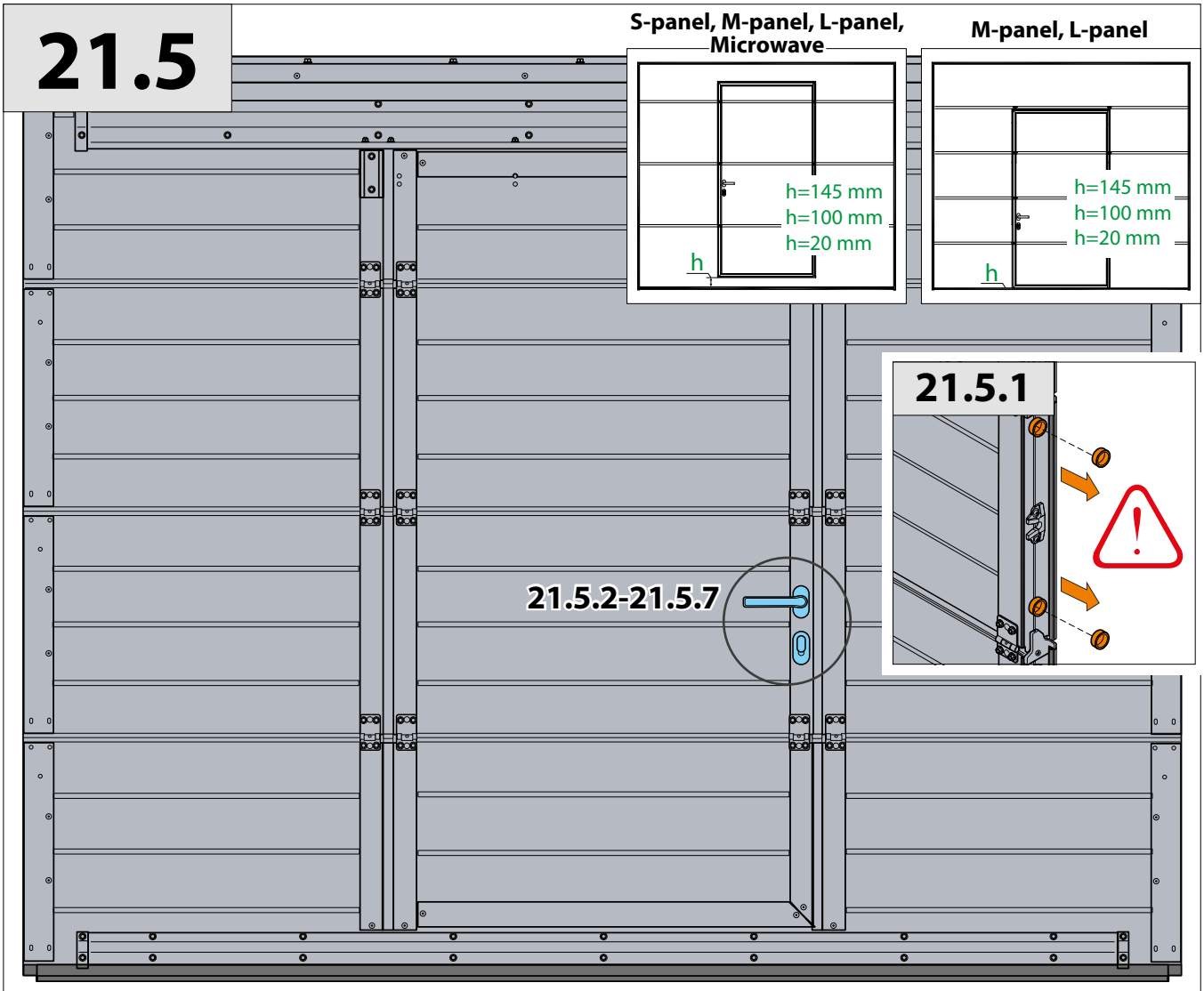
S-panel, M-panel, L-panel, Microwave
h=145 mm
h=100 mm
h=20 mm
h
M-panel, L-panel
h=145 mm
h=100 mm
h=20 mm
h
21.5.1
21.5.2-21.5.7

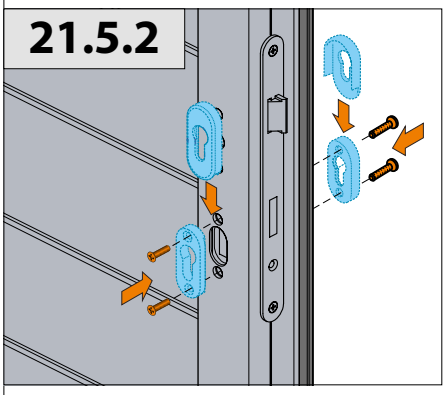
21.5.2

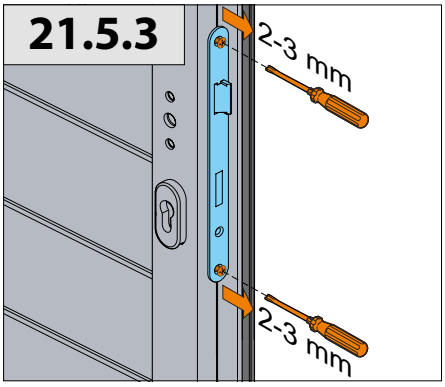
21.5.3
2-3 mm
2-3 mm

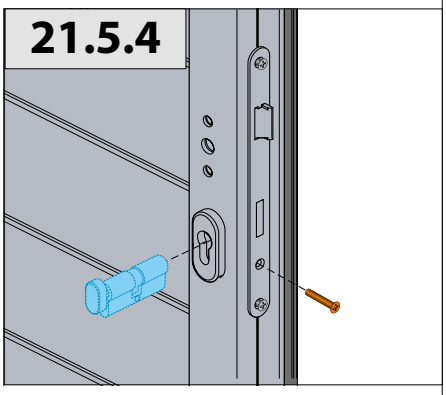
21.5.4

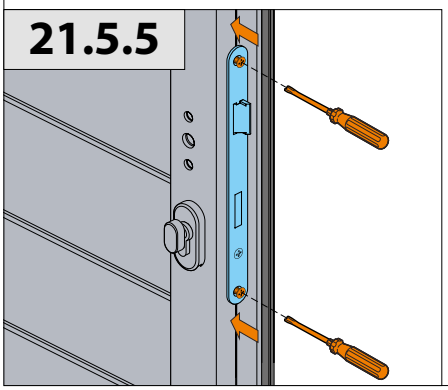
21.5.5

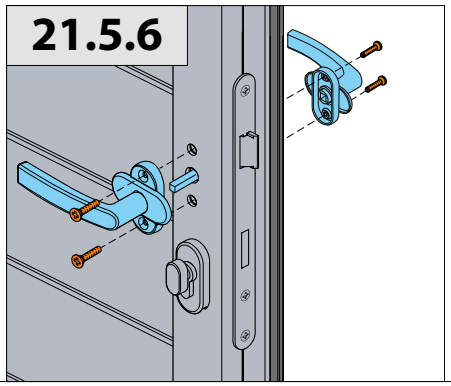
21.5.6

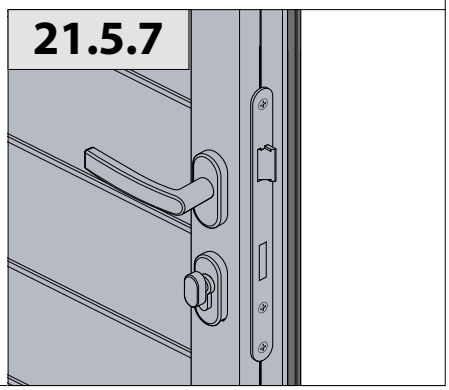
21.5.7

21.5.8

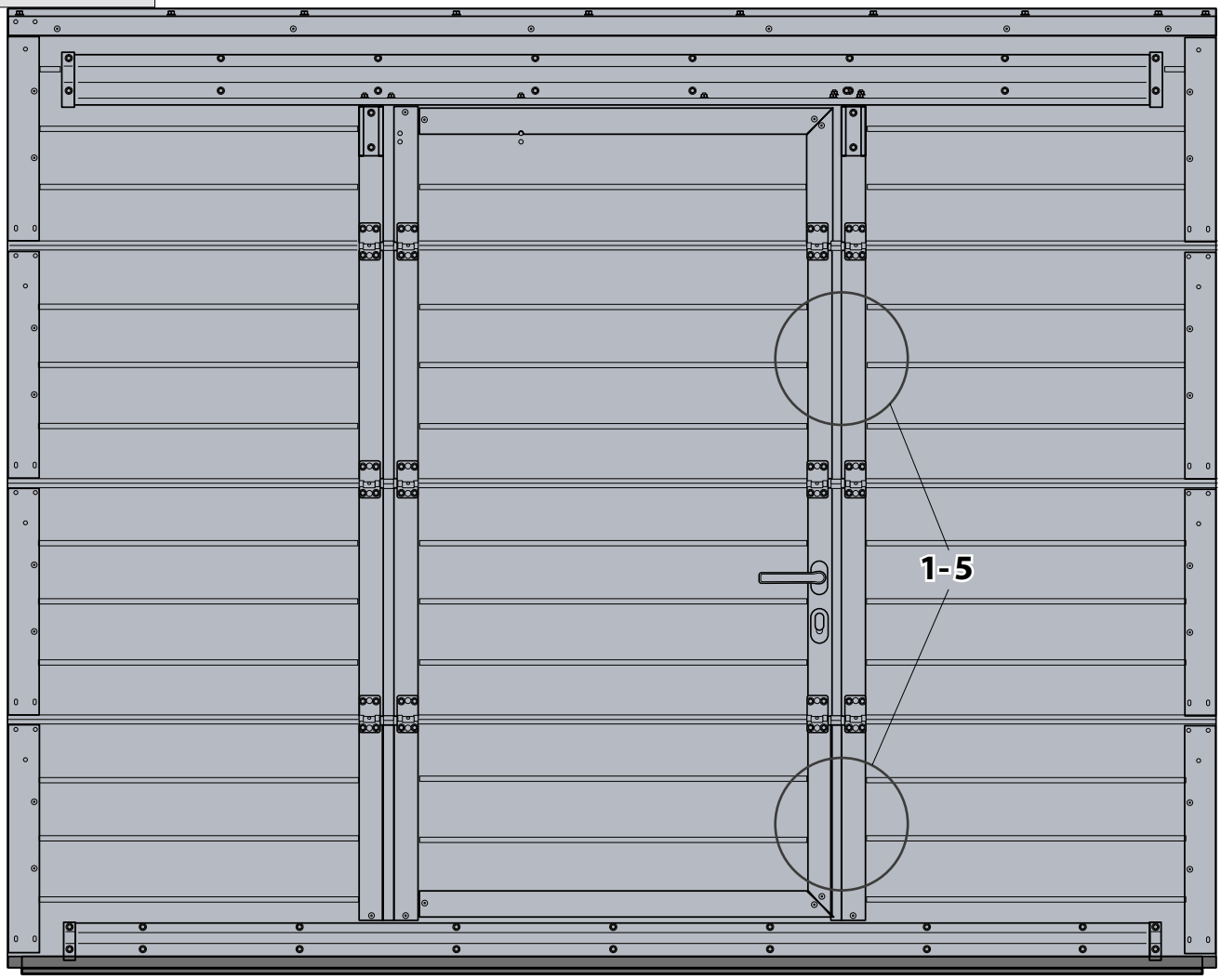

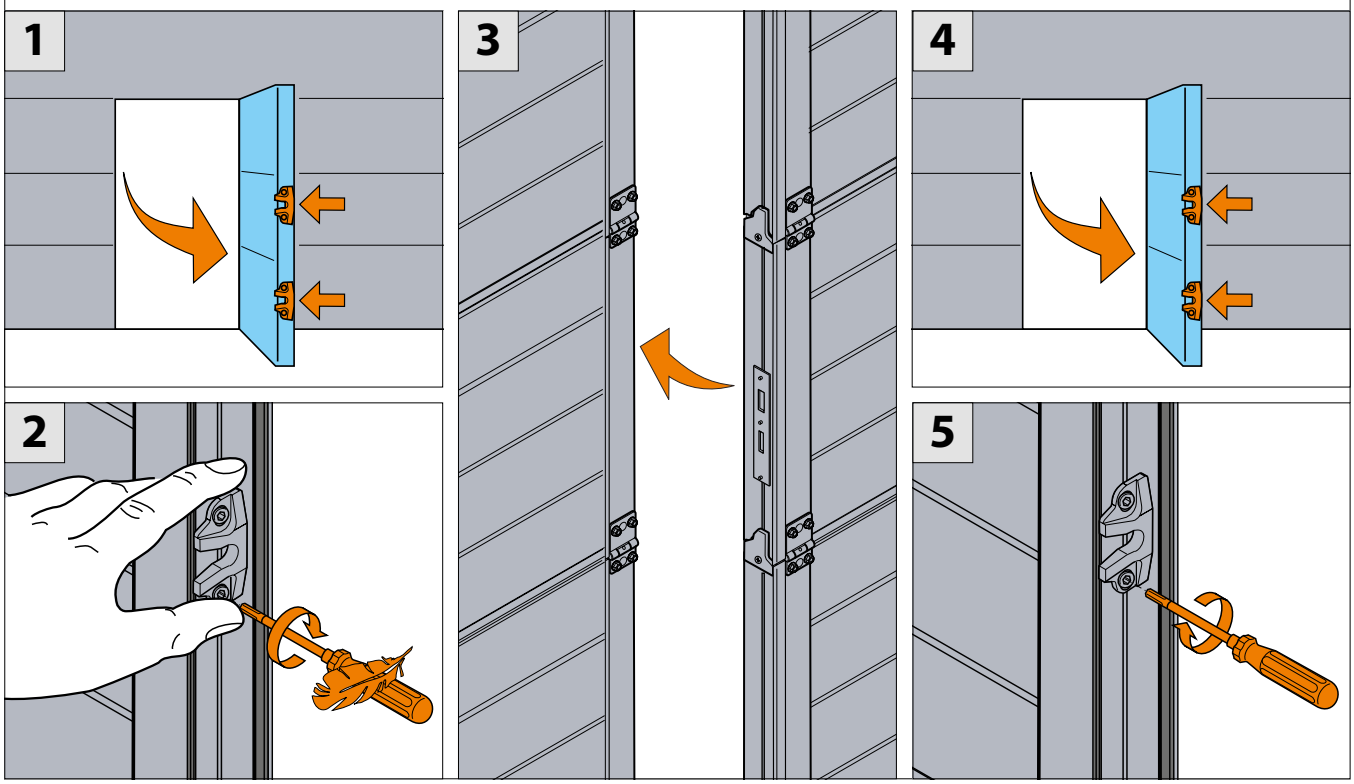

21.6

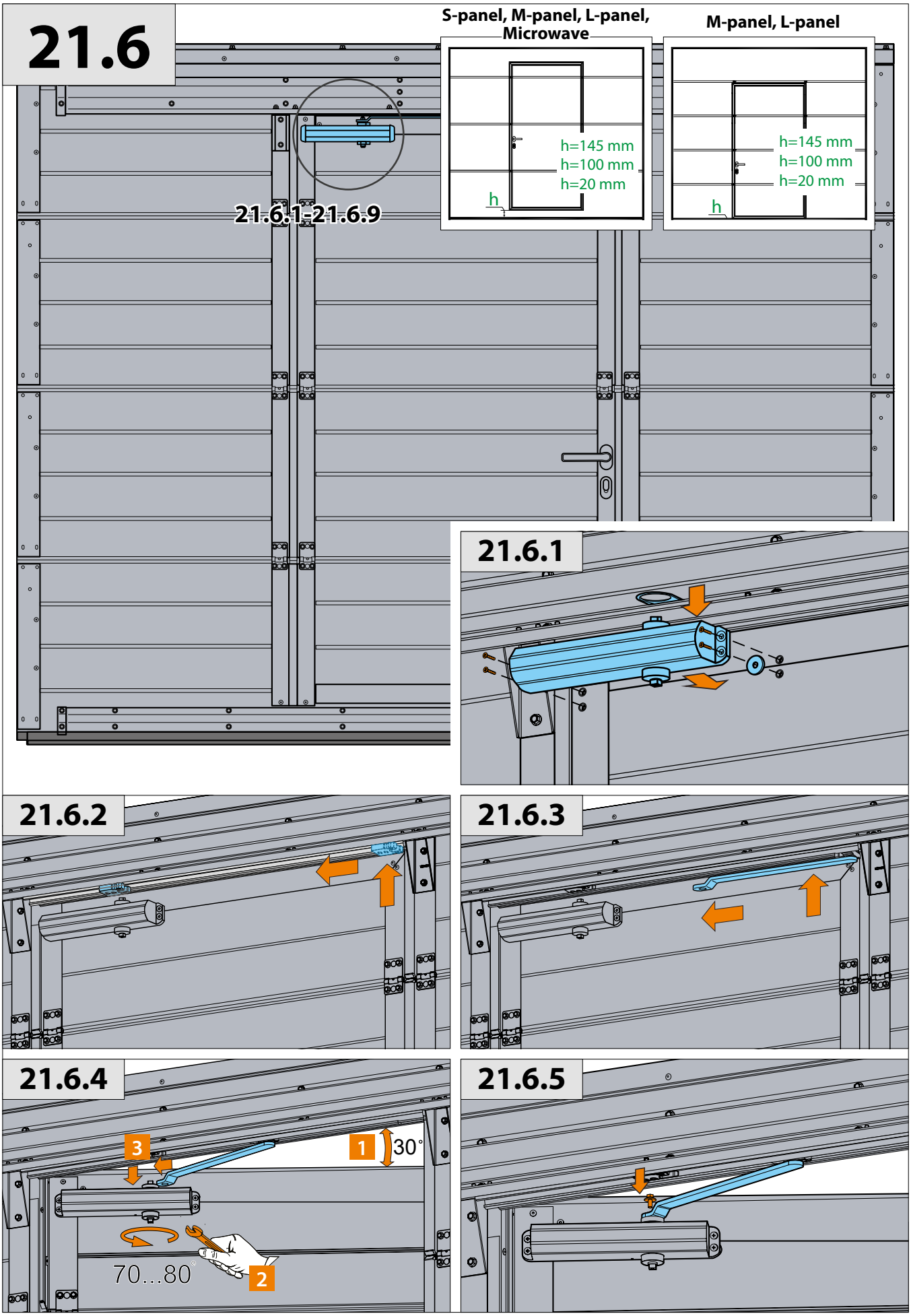
S-panel, M-panel, L-panel, Microwave
h=145 mm
h=100 mm
h=20 mm
h
M-panel, L-panel
h=145 mm
h=100 mm
h=20 mm
h
21.6.1-21.6.9
21.6.1
21.6.2
21.6.3
21.6.4
1
30°
2
3
70...80°
21.6.5

21.6.6

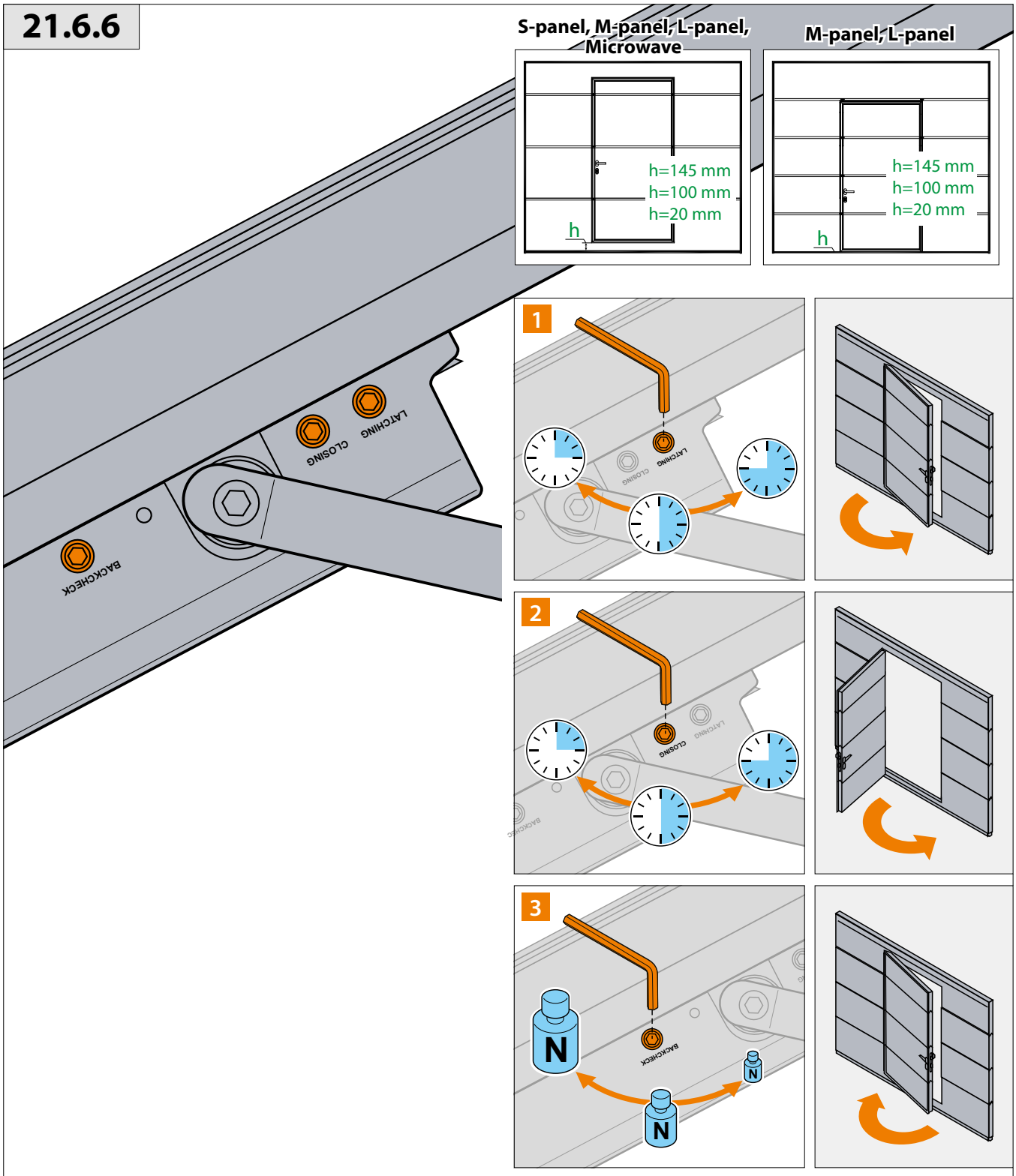

21.6.7

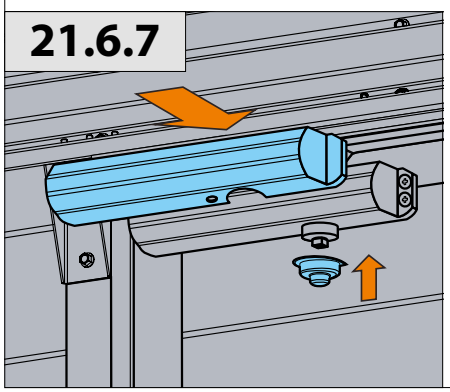

21.6.8

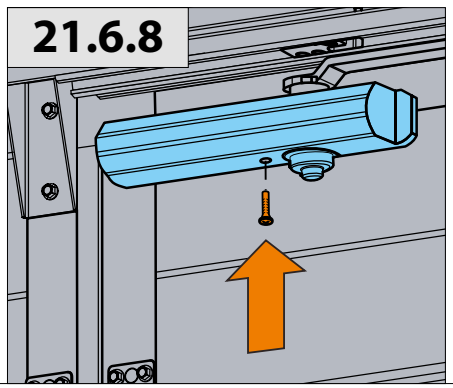
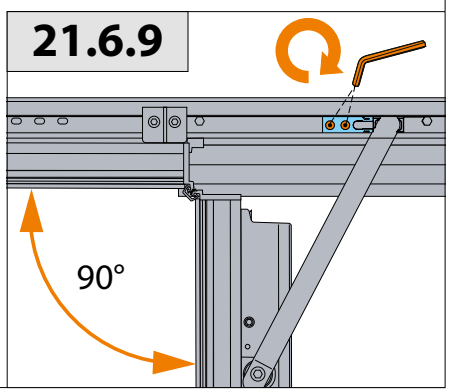
21.6.9